VILLAGE OF COTTAGE GROVE NOTICE OF PUBLIC MEETING

VILLAGE BOARD OF TRUSTEES

Monday, January 20, 2020 6:30 p.m. Village Municipal Offices

221 E. Cottage Grove Rd

1. Call To Order
2. Determination Of Quorum And That The Agenda Was Properly Posted
3. Pledge Of Allegiance
4. PUBLIC APPEARANCES-Public's Opportunity To Speak About Any Subject That Is Not A Specific Agenda Item
5. Discuss And Consider The Minutes Of The Regular Village Board Meeting On January 6, 2020.

   Documents:

   1-6-20 VB MINUTES.PDF

6. Presentations To The Board
   a. Presentation by Cindy Kelm-Nelson Re: 2020 Hot2Trot (Information item no action needed). b. Presentation of Civilian Gallantry Award to Jude Wolf.

   Documents:

   HOT2TROT 5K COURSE-2019 WITH AID.JPG
   HOT2TROT-HALF.JPG FOR RUNNERS (1).JPG
   GALLANTRY MEMO.PDF

7. New Business
   a. Discuss and consider Operator License application for Jessica Evans for licensing year July 2019-June 2020.

   Documents:

   OPERATOR LICENSE-JESSICA EVANS.PDF

8. Reports From Village Boards, Commissions & Committees

   8.I. Public Works & Properties Committee

Documents:

1.7.20 PW PACKET.PDF

8.II. Plan Commission

a. Discuss and Consider A Request from Greywolf For Approval of a General Development Plan for A Hotel, Located at Parcel #0711-041-2120-1 In the Commerce Park.

b. Discuss and Consider A Request from Doundrins Distilling for Conditional Use Permit for An Outdoor Seating Area at Their Facility Located At 300 Progress Drive.

c. Discuss and Consider A Request From The Monona Grove School District For A Site Plan Amendment For An Approximately 1,500 Sq. Ft. Addition To The Glacial Drumlin Middle School Cafeteria, Located At 801 Damascus Trail.

d. Discuss and Consider A Request from Village of Cottage Grove Park & Rec Dept. For Approval of a Site Plan Amendment for Bakken Park to Permit Installation of A New Shelter And Splash Pad.

e. Discuss and Consider A Proposed Amendment of The Village of Cottage Grove Zoning Ordinance to Create A New Single-Family Residential Zoning District with Minimum Lot Size Of 7,500 Sq. Ft.

Documents:

1-8-20 PLAN COMMISSION AGENDA.PDF
CG_VAR_PC-ARC_COMFORTSUITES-GDP_2020-01-15.PDF
CG_HOTEL-GDP_2019-12-20.PDF
00094071 LANDMARK DR COMFORT SUITES HOTEL REVIEW 12-30-19.PDF
199415 GENERAL DEVELOPMENT PLAN.PDF
199415 LOCATION MAP.PDF
199415 EXISTING CONDITIONS SURVEY.PDF
199415 LAND OWNERS WITHIN 400.PDF
CSCGWI 12-18-19 SET.PDF
PUD GDP APPLICATION LETTER 12.19.19.PDF
CG_VAR_PC_DOUNDRINS-CUP_2020-01-13.PDF
CG_DOUNDRINSDISTILL-CUP_2019-12-20.PDF
APPFORM_CUP_DOUNDRINS_2019-12-18-SIGNED.PDF
LAYOUT WITH BATHROOMS2-MODEL.PDF
OUTDOOR DESCRIPTION.PDF
OWNER APPROVAL_EMAIL.PDF
WRITTEN JUSTIFICATION.PDF
CG_VAR_PC_GLACDRUM-SITE_2020-01-13.PDF
CG_MGSD-GDCAFE-SITEAMEND_2019-12-17.PDF
2019_1206 PLAN COMMISSION SUBMITTAL_GLACIAL DRUMLIN.PDF
CG_VAR_PC_BAKKEN-SITE_2020-01-13.PDF
CG_BAKKENPK_2019-12-02.PDF
PART1-00094041_BAKKEN PARK SITE PLAN AMENDEMENT APP.PDF
PART2-00094041_BAKKEN PARK SITE PLAN AMENDEMENT APP-2.PDF
PART3-00094041_BAKKEN PARK SITE PLAN AMENDEMENT APP-3.PDF
CG_VAR_PC_ZONORD-TEXTAMEND_2020-01-13.PDF
CG_RESZON_2019-12-02.PDF

8.III. Community Development Authority

Documents:

2020-01-13 CDA AGENDA.PDF

8.IV. Library Planning Committee

a. Discuss and consider posting on the Village Website and Village Facebook page regarding addresses of Free Little Libraries in our community.

Documents:

1-13-20 LIBRARY PLANNING PACKET.PDF
MEMO-LIBRARY PLANNING COMMITTEE 1-17-20.PDF

8.V. Ad Hoc Architectural Review Committee

Documents:

2020-01-15 ARC AGENDA.PDF

8.VI. Parks, Recreation & Forestry Committee

Documents:

1.16.20 PRFC PACKET.PDF

8.VII. Deer-Grove EMS Commission

Documents:

1-16-2020 DGEMS COMMISSION PACKET.PDF

9. Reports From Village Officers
   a. Attorney Lee Boushea
      i. Legal briefings/status updates

10. Communications And Miscellaneous Business
    a. Consider approval of vouchers
    b. Correspondence
    c. Upcoming community events
    d. Future agenda items

    Documents:

    BILLS LIST 1-20-20.PDF

11. Closed Session:

    The Village of Cottage Grove Village Board will enter into Closed Session pursuant to Wisconsin State Statute §19.85 (1)(e) Deliberating or negotiating the purchasing of public properties, the investing of public funds, or conducting other specified public business, whenever competitive or bargaining reasons require a closed session. This closed session is to conduct Village Attorney interviews.

12. Reconvene Into Open Session And Possible Consideration Of Closed Session Items

13. Adjournment

This agenda has been prepared by Staff and approved by the Village President as Chair of the Village Board for use at the meeting as listed above. Any item on the agenda is subject to final action. Notice: Persons needing special accommodations should call 608-839-4704 at least 24 hours prior to the meeting. It is possible that members of and possibly a quorum of members of other governmental bodies may be in attendance at the above stated meeting to gather information; no action will be taken by any governmental body at the above-stated meeting other than the governmental body specifically referred to above in this notice.

Upcoming Meetings
Peer Court Steering Committee 1/21/20 @ Village Hall @ 5:15 pm

Municipal Court 1/21/20 @ Village Hall @ 6:00 pm
Open House-Lee Boushea @ MSB @ 11:00 am to 1:00 pm
Natvig Landfill Committee 1/27/20 @ Town Hall @ 6:00 pm
Jt Fire Commission 1/27/20 @ EOS @ 6:30 pm
LEC 1/28/20 @ MSB @ 5:30 pm
Ordinance Review Committee 1/29/20 @ Village Hall @ 5:30 pm
Peer Court 1/30/20 @ Village Hall @ 4:00 pm

VILLAGE OF COTTAGE GROVE

VILLAGE BOARD OF TRUSTEES

Monday, January 6, 2020

MINUTES

1. **Call to order**
   Village President John Williams called the Village Board of Trustees to order at 6:30 pm.
2. **Determination of quorum and that the agenda was properly posted.**
   It was determined that there was a quorum of members present and that the agenda was properly posted. Village Board members present were: John Williams, Jeff Lennberg, Heidi Murphy, Melissa Ratcliff, Jon Russell, Sarah Valencia. Troy Allen was absent and excused. Staff present were Village Administrator Matt Giese, Village Clerk Lisa Kalata, Village Planner Erin Ruth, Public Works Director JJ Larson, Village Treasurer Deb Winter, Police Chief Dan Layber, Village Engineer Mike Maloney and Village Attorney Leighton Boushea.
3. **Pledge of Allegiance.**
4. **PUBLIC APPEARANCES –** *Public's opportunity to speak about any subject that is not a specific agenda item.*
   None
5. **Discuss and Consider the Minutes of The Regular Village Board Meeting on December 16, 2019.**
   Valencia indicated that there was a typo in item 8.I, the first sentence was missing the word cost. **Motion** by Ratcliff to approve the minutes with the correction, seconded by Russell. **Motion** carried with a voice vote of 6-0-0.

6. Unfinished Business

a. Discuss and consider potential dates for next Joint Village/Town meeting (this item was tabled at the November 18, 2019 Village Board meeting until the first meeting in January 2020).

Motion by Valencia to take item 6 a. off the table, seconded by Williams. **Motion** carried with a voice vote of 6-0-0. **Motion** by Lennberg to table item until the first meeting in March, seconded by Russell. **Motion** carried with a voice vote of 6-0-0.

7. New Business

a. Discuss and consider Liquor License application for Don Maguey, LLC for licensing year July 2019-June 2020.

Kalata explained that the applicant was seeking a liquor license as part of the lease agreement and would be contingent upon approval of a conditional use permit from the Plan Commission and Village Board of Trustees M**otion** by Lennberg to approve the liquor license for Don Maguey, LLC with the condition off obtaining a conditional use permit from the Plan Commission and Village Board of Trustees, seconded by Ratcliff. **Motion** carried with a voice vote of 6-0-0.

b. Discuss and consider Ordinance 01-2020 Re: Amending Chapter 103-1, Commercial Building Code.

Kalata explained the revision of Chapter 103-1 was to adopt the Commercial Building code and this would allow General Engineering to review state plans. **Motion** by Ratcliff to approve ordinance 01-2020 amending Chapter 103-1, commercial building code, seconded by Lennberg. **Motion** carried with a voice vote of 6-0-0.

8. Reports from Village Boards, Commissions & Committees

8.I. Public Relations Committee

Giese reported that they discussed the items that were put in the 2020 budget and now that we have a new cable coordinator, he had different ideas on updating equipment. It would be the same dollar amounts however he would purchase new microphones and remote cameras. Derek is also looking into grants.

8.II. Deer-Grove EMS Commission

Williams reported that they discussed the Chiefs annual review and the process along with the general updates that occur monthly.

9. Reports from Village Officers

a. Attorney Lee Boushea

i. Legal briefings/status updates

DRAFT

Attorney Boushea reported that he read an article in the newspaper about Dane County and some of the committee chairs having meetings. This is something to keep an eye on as open meetings law is everywhere so just want to make you aware. You want to be transparent.

10. Communications and Miscellaneous Business

a. Consider approval of vouchers.

Motion by Lennberg to approve the Village portion of the vouchers in the amount of $340,192.79 for 12/31/2019, seconded by Valencia. The check sequence goes from check #46502 to check #46561. **Motion** carried with a voice vote of 6-0-0. **Motion** by Ratcliff to approve the Village portion of the vouchers in the amount of $78,315.35 for 1/7/2020, seconded by Lennberg. **Motion** carried with of voice vote of 6-0-0.

b. Correspondence-WIDOT-Transportation Aid, Giese indicated that Kevin Lord from MSA would be taking over for Mike Maloney.

c. Upcoming community events- The Lions will be having a Breakfast on February 1st, Parks, Recreation meeting will be at 5:30 pm on 1/16/2020. The optimist club will have a Euchre tournament in March.

d. Future agenda items- none

11. Closed Session: The Village of Cottage Grove Village Board will enter into Closed Session pursuant to Wisconsin State Statute §19.85 (1)(e) Deliberating or negotiating the purchasing of public properties, the investing of public funds, or conducting other specified public business, whenever competitive or bargaining reasons require a closed session. This closed session is for negotiations in TID #5.

Motion by Williams to enter into closed session at 6:55 p.m., seconded by Russell. **Motion** carried with a roll call vote of Lennberg AYE, Williams AYE, Murphy AYE, Ratcliff AYE, Russell AYE, Valencia AYE.

12. Reconvene into open session and possible consideration of closed session items.

Motion by Ratcliff to reconvene into open session at 7:13 p.m., seconded by Lennberg. **Motion** carried with a roll call vote of Lennberg AYE, Williams AYE, Murphy AYE, Ratcliff AYE, Russell AYE, Valencia AYE. No action was taken in closed session.

13. Adjournment

Motion by Murphy to adjourn at 7:13p.m., seconded by Lennberg. **Motion** carried with a voice vote of 6-0-0.

Lisa Kalata, Clerk
Village of Cottage Grove
Approved:

These minutes represent the general subject matter discussed in this meeting but do not reflect a verbatim documentation of the subjects and conversations that took place.

DRAFT

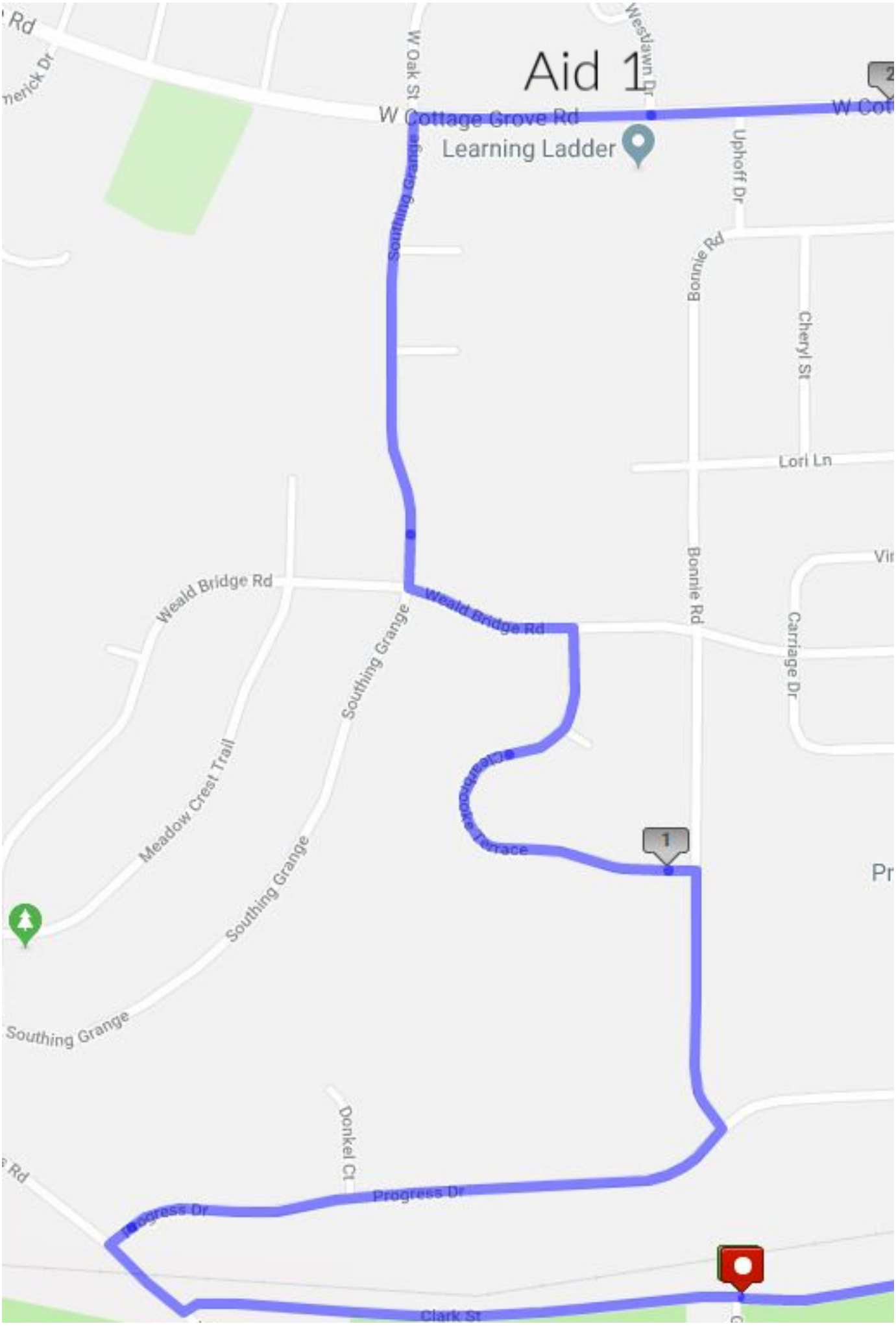
Aid 1
W Cottage Grove Rd
Learning Ladder
W Oak St
Southing Grange
Westlawn Dr
Uphoff Dr
Bonnie Rd
Cheryl St
Lori Ln
Weald Bridge Rd
Meadow Crest Trail
Carriage Dr
Donkel Ct
Progress Dr
Clark St
1
2

Cottage Grove Rd
Aid
POLICE
2
POLICE
N Cottage Grove Rd
POLICE
3
N Main St
1
POLICE
13
12
Cottage Grove
Aid
POLICE
Bakken Park
N
N

Civilian Gallantry Award

MEMO DATE: **13 January 2020**

TO: Administrator Matt Giese

FROM: Chief Dan Layber

RE: **Civilian Gallantry Award**

OVERVIEW/BACKGROUND

On Saturday, December 14, 2019, in the Village of Cottage Grove, Officer Brian Carter of the Cottage Grove Police Department was attempting to detain an 18-year-old subject for a disturbance and suspicious activity at a gas station. The subject was acting oddly, refused to leave the gas station after being refused to purchase tobacco, and was scaring and harassing customers. Upon Officer Carter contacting the subject, he refused Officer Carter's order to stop and kept walking down a nearby street. Officer Carter then attempted to stop the subject by grabbing at his arm. The subject responded by attempting to strike Officer Carter and pushed him. A struggle ensued with both falling to the ground and at one point the subject attempted to grab the Officer's gun. At this point in time, Jude Wolf, who was watching this situation unfold from the gas station parking lot, pulled his vehicle out onto the street, blocked traffic, exited his vehicle and physically intervened in helping officer Carter arrest this subject. There was no hesitation on Mr. Wolf's part, and his physical intervention was effective in moving the subject from on top of the Officer to a position where he could be handcuffed.

DEPARTMENT HEAD RECOMMENDATION

We will present the Civilian Gallantry Award to Mr. Jude Wolf of Cottage Grove for his quick and decisive actions on December 14, 2019, wherein he physically intervened in a struggle between a Police Officer and a subject, quickly resulting in the subject being placed in custody. Mr. Wolf's gallantry is to be commended due to his lack of regard for his own safety and the civic duty he didn't hesitate to provide to an Officer in need.

COTTAGE GROVE

Lisa Kalata

From:	David Stortz
Sent:	Thursday, January 16, 2020 2:52 AM
To:	Lisa Kalata
Cc:	Samantha Vaught; Daniel Layber
Subject:	FW: Attached Image
Attachments:	4040_001.pdf

After reviewing Jessica J Evans' WORCS, DOT, RMS, and WI Circuit Court Access records, I have not located any issues which would prevent Evans from obtaining her Operators License and I recommend Evans for approval of her Village of Cottage Grove Operators License Application.

STATE OF WISCONSIN
DEPARTMENT OF JUSTICE

- Request Date: **1/16/2020**
- Report Date: **1/16/2020**

This criminal background check was performed by searching the following data submitted to the Crime Information Bureau

- Name: **EVANS, JESSICA J**
- Date of Birth: **11/4/2001**
- Alias Names:

NOTICE TO EMPLOYERS

It may be a violation of state law to discriminate against a job applicant because of an arrest or conviction record. Generally speaking, an employer may refuse to hire an applicant on the basis of a conviction record only if the circumstances of the offense for which the applicant was convicted substantially relate to the circumstances of the particular job. For more information, see Statute 111.335 and the Department of Workforce Development's publication, Arrest and Conviction Records Under the Law.

Before you make a final decision adverse to an applicant based on the following arrest record, in addition to any other opportunity you offer the applicant to explain the following arrest record, please notify the applicant of:

1. His or her right to challenge the accuracy and completeness of any information contained in a arrest record, and
2. The process for submitting a challenge

VILLAGE OF COTTAGE GROVE OPERATORS LICENSE APPLICATION

New X

Renewal _____

Please complete all required information. This application must be answered completely and accurately before processing. A $25.00 license/application fee is required and must accompany this application. If you have not previously held an operators license in the Village of Cottage Grove a copy of the Responsible Beverage Servers Certificate must be attached. **All applicants are required to provide a copy of their Wisconsin Drivers License or I.D. Card. The annual licensing period is from July 1 through June 30.**

Full Name: Jessica Jamie Evans
First Middle Last

Complete Address: [redacted]
Street Address City/State/Zip Code

Phone Number (h) [redacted] (W) _____

Drivers License Number [redacted]

Previous Names: [redacted] Date of Birth [redacted]

Applicants must specify name, address and phone number of the establishment where they will be employed. Also the name of supervisor if we have any questions.

Name address & phone number of Establishment:
Black Bear Inn (608)839-5222
320 West Cottage Grove Rd

Name of Supervisor:
Dominick DeRosa

Date and Location of Responsible Beverage Server Course
12/29/19

List all previous addresses within the past 3 years:

_____

You **must** complete all boxes: Any question answered **YES** **must** be explained on the back of this page in detail, with any appropriate documentation attached. You may attach additional pages if necessary.

1. **In the past 5 years, have you been arrested, convicted of or charged with any of the following:**
   - A. Illegal purchase, sale or providing alcoholic beverages. Yes ____ No X
   - B. Violation of closing hours at a licensed premises. Yes ____ No X
   - C. Operating a motor vehicle while under the influence of drugs and/or alcohol. Yes ____ No X
   - D. A violation of an alcohol beverage law, regulation or rule not specified above. Yes ____ No X
   - E. Disorderly conduct, criminal damage to property or obstructing an officer. Yes ____ No X
2. **Have you EVER been arrested, convicted of or charged with a Felony?** Yes ____ No X
3. **Have you held any type of alcohol beverage license in the last 3 years? If so, list type and location on the back of this page.** Yes ____ No X
4. **Do you presently have any overdue or outstanding forfeitures resulting from a violation of any county, state or local ordinance?** Yes ____ No X
5. **Have you ever had any alcohol beverage license revoked, suspended or not renewed?** Yes ____ No X

For Village Clerk's Use Only

Date Received 12/30/19

Fees Received 25.00

Receipt # 100384

Provisional # 1920-52

Background Completed

_____

Approved or Denied

Date Issued _____

License # _____

Legal Review if Denied

_____

Certification-Please Read Carefully!

I hereby certify that the information provided on this application is true and correct. **I understand that failure to provide all required information shall be grounds for denial of this alcohol beverage license.** I further understand that falsification of any information provided may be grounds for denial or revocation of this license. I fully understand all state and local laws and ordinances governing the sale of alcoholic beverages that apply to this application, and agree to abide by those laws.

I hereby authorize the Village of Cottage Grove to perform a criminal background and drivers license check.

Signature Jessica Evans Date 12-29-19

VILLAGE OF COTTAGE GROVE *NOTICE OF PUBLIC MEETING*

PUBLIC WORKS & PROPERTIES COMMITTEE

Tuesday, January 7, 2020
6:00 PM

Municipal Services Building
210 Progress Drive

AGENDA

1) **Call Meeting to Order**

2) **Quorum and roll call**

3) **Public Appearances** – Public's opportunity to speak about any subject that is not a specific agenda item.

4) **Old Business**
   a. Discuss potential crosswalk options on Cottage Grove Rd.
   b. Discuss Village road salt use and potential pilot program.

5) **New Business**
   a. Discuss and consider recommendation on proposed MOU from MG School District regarding designation of Village Hall as a short-term evacuation site.
   b. Discuss and consider potential intern for summer of 2020.
   c. Discuss potential Village leaf collection program.
   d. Discuss potential changes to compost drop off.

6) **Engineer's report**

7) **Director's report**

8) **Approve the minutes of the November 5, 2019 Public Works & Properties Committee meeting.**

9) **Recognition of Village Engineer, Mike Maloney's, years of service to the community.**

10) **Set tentative date for next meeting**

11) **Future Agenda Items**

12) **Adjournment**

Notice:

1. Persons needing special accommodations should call 839-4704 at least 24 hours prior to the meeting.
2. It is possible that members of and possibly a quorum of members of other governmental bodies may be in attendance at the above stated meeting to gather information; no action will be taken by any governmental body at the above-stated meeting other than the governmental body specifically referred to above in this notice.
3. Any item on the agenda is subject to final action

ITEM 5a

MEMORANDUM OF UNDERSTANDING REGARDING USE OF A FACILITY AS A SHORT-TERM EMERGENCY EVACUATION SITE

This memorandum of understanding ("Agreement") is entered into this 13 day of November, 2019, ("Effective Date") by and between:

PARTIES: Village Hall
221 E Cottage Grove
Cottage Grove, WI 53527

("Owner")

And

Monona Grove School District
5301 Monona Drive
Monona, WI 53716

("District")

(Collectively, "the Parties")

RECITALS:

WHEREAS, The District has a need for a facility to serve as a short-term evacuation site for Cottage Grove School ("School") in the event that the School experiences an emergency or crisis requiring the evacuation of students and staff; and

WHEREAS, The Owner has a facility which includes space(s) or area(s) that are appropriate or adequate to serve as a school evacuation site for the School; and

WHEREAS, The Parties desire to reach an understanding that will result in the Owner providing a facility owned by the Owner to the District to serve as an emergency evacuation site for the School.

NOW THEREFORE, in consideration of the mutual covenants contained herein and other good and valuable consideration, the receipt and sufficiency of which is hereby acknowledged by the Parties, the Parties agree as follows:

TERMS AND CONDITIONS:

This Agreement is made for the temporary use of the facility designated below ("Facility") for use by the District as a short-term evacuation site for the School's students and staff in the event of a School evacuation. If the students and staff cannot return to the School following the evacuation, the students and staff will be bused from the Facility to their designated family reunification site to be unified with their families.

1. **Facility Name and Address**

Village Hall
221 E Cottage Grove
Cottage Grove, WI 53527
608-839-4704

2. **Owner's Responsibilities**

a) The Owner has identified the Facility, and the District has determined that the Facility is suitable for use as a short-term evacuation site. The Owner will make the Facility available to the District as an evacuation site. Availability of the Facility will include use by the District, with advance notice, for no more than two evacuation drills conducted by the District on an annual basis (July 1 through June 30).
b) The Owner will designate a person and one or more alternates to serve as the Owner's contact/representative for the Facility in the event of a School evacuation by the District. The Owner will provide the District with the necessary phone numbers to reach the Owner's contact/representative.
c) The Owner will provide the District with access to the Facility during the school term in the event of a School evacuation. The Owner will provide the District with keys and/or access codes to exterior and interior doors needed to access the area(s) designated for use by the Owner in the event of an evacuation.
d) The Owner will provide an orientation of the Facility to designated District staff. The orientation will include how to access the area(s) designated for use by the District in the event of an evacuation, location of lights, restrooms, drinking water, and available tables/chairs.

3. **District's Responsibilities**

a) The School principal or designee will serve as the designated representative for the District in the event of an evacuation.
b) The School principal or designee will be responsible for keys and/or access codes for the Facility issued to the District by the Owner.
c) The School principal or designee will appoint an evacuation advance team that will be dispatched to the Facility ahead of students and staff. The advance team is responsible for readying the Facility for the arrival of students and staff being evacuated.
d) The District will make reasonable efforts to give advance notice to the Owner prior to arriving at the Facility in the event of an evacuation.
e) The District will only utilize area(s) in the Facility that the Owner has designated for use by the District.
f) The District is responsible for providing appropriate supervision of its students at the Facility during an evacuation.
g) To the extent permitted by law, the District agrees to indemnify, save and hold free and harmless, the Owner of the Facility, its officers, agents, representatives and employees from and against all claims, demands, loss, liability, cost or expense of any kind or nature whatsoever which the Owner, its officers, agents, representatives or employees or any of them may sustain or incur, or that may be imposed upon any of them, or injury to, or death of, persons or damages to the property arising out of, connected with, or attributable to use of the Facility by the District as an evacuation site. Notwithstanding the foregoing, this hold harmless and indemnification provision does not include claims, demands, loss, liability, cost, or expense of any kind or nature whatsoever arising from the negligent, intentional, or reckless acts of the Owner, its employees, officers, agents, or representatives. Nothing herein is intended or shall

be construed as a waiver of defenses or immunities (including the limitation of Wis. Stat. § 893.80) available under the law which the District is entitled to raise.

h) The District will add the Owner as an "additional insured" on the District's General Liability Insurance Policy. The District shall provide the Owner with a Certificate of Insurance on an annual basis to verify coverage. The policy shall include personal injury and property damage coverage. Nothing herein is intended or shall be construed as a waiver of defenses or immunities (including the limitation of Wis. Stat. § 893.80) available under the law which the District is entitled to raise.

i) The District will not pay any operational or administrative fees to the Owner for use of the Facility as an evacuation site.

j) The District agrees to reimburse the Owner, if requested, for all reasonable direct costs incurred by the Owner when the Facility is utilized by the District as an evacuation site.

k) In the event of an evacuation, the District shall provide any and all releases of information to the press and media. Requests for interviews or information submitted to the Owner or the Facility shall be directed to the District Administrator of the District. The District will make a reasonable effort to recognize the hospitality of the Owner and the Facility in any press or media releases pertaining to the re-location and sheltering of students and staff.

4. Term

This Agreement shall be in force and effect from the Effective Date through June 30, 2020 ("Initial Period"). The Agreement shall be renewed automatically following the Initial Period for subsequent one-year (July 1 through June 30) terms unless either party provides notice of termination to the other party in writing at least ninety (90) days prior to June 30.

Notice of termination shall be in writing and shall be deemed to have been duly given if delivered or mailed, by courier, by facsimile confirmed by U.S. first class mail, by registered mail, first class postage paid, return receipt requested, or any other delivery service with proof of delivery:

If to the Owner:
Matt Giese
Village Hall
221 E Cottage Grove Road
Cottage Grove, WI 53527

If to the District:
District Administrator
Monona Grove School District
5301 Monona Drive
Monona, WI 53716

5. Entire Agreement, Interpretation, Severability.

This Agreement contains the entire agreement between the Parties and supersedes all prior or contemporaneous agreements, negotiations and undertakings, whether oral or written, between the Parties relating to the subject matter of this Agreement. The language of all parts of this Agreement shall in all cases be construed as a whole, according to its fair meaning, and not strictly for or against either of the Parties. Invalidity of any provision of this Agreement shall not affect the validity of any other provisions. Nothing in this Agreement is intended to conflict with current laws or regulations of the United States of America, the State of Wisconsin, or local government. If a term of this Agreement is inconsistent with such authority, then that term shall be invalid, but the remaining terms and conditions of this Agreement shall remain in full force and effect.

6. Changes and Modifications; Binding Effect.

No waiver, amendment, release, or modification of this Agreement shall be binding unless evidenced in writing signed by both Parties or an authorized representative of both Parties. This Agreement shall be binding upon, and inure to the benefit of, the Parties and their successors and permitted assigns, but shall not be assignable, by operation of law or otherwise, by either of the Parties without the prior written consent of the other party.

7. Governing Law.

This Agreement shall be governed by and construed and enforced in accordance with the laws of the State of Wisconsin.

8. Section Headings.

The headings to the sections of this Agreement are solely for the convenience of the Parties and shall not be used to explain, modify, simplify, or aid in the interpretation of the provisions of this Agreement.

IN WITNESS WHEREOF, the Parties hereby acknowledge the foregoing as the terms and conditions of their understanding and have executed this Agreement or caused this Agreement to be duly executed by their authorized representative as of the day and year written below, but the Agreement shall take effect on the Effective Date.

Village Hall	Monona Grove School District
By: _____	By: _____
Matt Giese	Daniel W. Olson, Ed.D, Superintendent
Date: _____	Date: _____

ITEM 5b

Village of Cottage Grove

Public Works & Utilities Engineering Intern - Stormwater

GENERAL STATEMENT OF DUTIES

Position will be responsible for illicit discharge and stormwater outfall inspections, recording and reporting utilizing Village GIS applications. Position will also develop, and present public education and information materials and workshops related to stormwater quality. Work at the direction of the Director of Public Works.

DUTIES AND RESPONSIBILITIES

The following duties are normal for the position. These are not to be construed as exclusive or all-inclusive; other duties may be required and assigned.

- Working with the Director, develop education and informational materials (hard copies, electronic, social media, website, in-person presentations and more) for public distribution.
- Utilize Village GIS system to conduct illicit discharge inspections of stormwater outfalls.
- Fill out and prioritize work orders for any deficiencies found during inspections.
- Develop reports of stormwater system inspections for submission to regulating bodies.

KNOWLEDGE, SKILLS AND ABILITIES

- General knowledge of tools and equipment used in Public Works inspections.
- Ability to learn to use industry-specific tools.
- Ability to communicate effectively, follow verbal and written instructions, and maintain cooperative relationships with the public and co-workers.
- Ability to work safely in the roadway and in unpaved, natural areas.
- Ability to use tablets and navigate GIS for data collection.

QUALIFICATIONS

- Minimum of 18 years of age
- High school diploma or equivalent
- Valid Wisconsin driver's license

PHYSICAL REQUIREMENTS

- Tasks involve the regular and, at times, sustained moderately physically demanding work, typically involving some combination of climbing and balancing, stooping, kneeling, crouching, crawling, and lifting, carrying, pushing, and pulling moderately heavy objects and materials.

WORK ENVIRONMENT

- Work is primarily outdoors and in Village facilities. Regularly work in dirt, dust, noise, odors, fumes, darkness, and all manners of weather. Occasionally work at height and in the roadway with moving traffic.

HOURS OF WORK

Work hours for this position can be flexible, but typically will occur inside normal Department operating hours (ex. M – F, 7am – 3pm or 8am – 4pm). Up to 40 hours per week.

ITEM 6

Engineer's Report | A Review of Projects in the Community

Village of Cottage Grove, WI

PREPARED BY: Kevin Lord PE/RLS and Mike Maloney PE
klord@msa-ps.com

DATE: January 2020 Report

QUARRY RIDGE SUBDIVISION - Surety is reduced from $850,000 to $350,000 with asphalt surface course, sidewalk and restoration remaining for spring. A new annual Land Disturbance Permit was released for the quarry area. The permit provides limited operational hours and requires an added gate to prevent random access and dumping from occurring.

BUSS ROAD / COTTAGE GROVE ROAD INTERSECTION PLAN - We prepared a plan to align Buss Road through the Cottage Grove Road intersection. Kevin Lord will be communicating with land owner's to prepare the improved geometry plans for the intersection.

5TH ADDITION TO WESTLAWN ESTATES – The land disturbance permit was received by the Village for construction grading to commence this fall/winter. The Homburg's plan to construct utilities this winter as weather permits.

COTTAGE GROVE COMMONS – Foundation construction is underway for the apartment building. We authorized fencing as long as it remains adequately (10 feet or more) away from the street for safety and snow plowing.

VILAS ROAD SEWER AND WATER – MSA commenced design activities including ordering geotechnical engineering and topographic survey. The soils report will identify suitable backfilling requirements based on existing soils. It will also identify the ground water elevation for bidding the de-watering needed for construction.

PHEOBE BAKKEN PARK – MSA is preparing the bidding documents to solicit bids for the shelter and slash pad.

GLOBAL INFORMATION SYSTEM – MSA staff is completing the structure measurements of the sanitary and storm system for mapping and capacity calculations. We ordered flow meters to install in key sanitary sewer locations to determine the existing flows in Village interceptor sewers. These work items will help determine the level of development whether in the west or north that trigger the need for the farm interceptor.

ITEM 7

Village of Cottage Grove

Department of Public Works

Director's Monthly Report to the Public Works & Properties Committee

January 7th, 2020

Transitions in 2020

- A lot of change in long-time Village consultants.

Snow

- December was historically quiet.
- Transition to Parks/PW position handling paths/sidewalks has gone well.

Roads & Street work

- Contacted Wolf about area of small failures on Southing Grange; will require repair in summer.
- Plan to start working on SMA lined up in order to bid W. Parkview for 2020.

ITEM 8

VILLAGE OF COTTAGE GROVE PUBLIC WORKS & PROPERTIES COMMITTEE
MEETING MINUTES OF NOVEMBER 5, 2019

1. **Call to Order at the Former Public Works Building.** The meeting was called to order at 6:01 p.m. by John Williams.

2. **Determine that a quorum is present and that the agenda was properly posted.**
It was determined that a quorum was present and that the agenda had been properly posted. Committee members present were Mike Hackel, Larry Kieck, Scott Schuerman and John Williams (chair). Andy Eberhardt was absent and excused. Also present were Public Works Director JJ Larson, Utility Clerk Kristen Krause, Mike Maloney of MSA and one member of the public.

3. **Public Appearances – Public's opportunity to speak to Committee Members about any item that is not a specific agenda item.**
Susan O'Kroley of Crawford Drive was present to ask the committee about the possibility of dredging the area behind her and her neighbors' homes on Crawford Drive to improve water drainage. She understands that the recent heavy rainfall has played a part in the ground saturation, but also believes that the way the water is not flowing properly is also to blame and is looking to the committee to come investigate the area of concern to see what could be done. She requested that be notified of any findings by Village staff and engineers.

4. **Old Business**
   a. **Discuss potential crosswalk options on Cottage Grove Road.**
   A crosswalk at Sandpiper Trail is still being considered and is currently an add-on with the Vilas Road Creek Crossing Project that is in the budget for 2020. Larson will continue to update as more information becomes available.

   b. **Update street sweeping plan.**
   After some research, Larson was not able to find a community larger than Albany, Wisconsin that currently contracts out for street sweeping. Larson also mentioned that street sweeping would need to be done in conjunction with leaf collection in the future, if the Village decides to begin that service. Budgets would also need to be adjusted if the Village were still looking to contract out street sweeping, since it would shift the service to an operating budget item from a capital budget item (for our own sweeper). Larson said he would continue to look into contracting out street sweeping if the committee directed him to, otherwise he will continue to search for a new Village street sweeper. The committee did not direct him to pursue contracting out the service.

5. **New Business**
   a. **Discuss and consider winter maintenance policy for mid-block paths in Westlawn.**
   Larson stated that the Village has taken over maintenance of the off-street multi-use path in the Westlawn 4th Addition from Damascus north, and west on the south side of Mourning Dove. He then explained that there are mid-block paths that run north-south between homes in the subdivision. Since the paths do not lead anywhere, he doesn't want to encourage travel along these paths into snow-covered fields. Larson is recommending a policy that would state that the mid-block paths remain unplowed by Village staff until the paths connect to other facilities or sites. He would also like to post signage along the paths indicating that they will not be cleared of snow during the winter months. **Motion** by Kieck, seconded by Hackel, to approve the policy that Larson presented. Motion carried with a unanimous voice vote of 4-0-0.

   b. **Discuss and consider repaving plan for 2020.**
   After discussing road conditions and ratings with the Public Works Foreman, Marty Groskreutz, Larson and he agreed that West Parkview Street is a good candidate for full-depth repaving in 2020. This is the second year of the Village's capital road repaving plan, which was developed to

continue to proactively repair/maintain the Village's streets. West Parkview is a heavily traveled street and in great need of repair. Larson also explained that LRIP funds were applied for and received for the repair of this street. Larson is recommending that the street have a full-depth repave from Westlawn Street to Main Street. **Motion** by Hackel, seconded by Kieck, to approve the 2020 repaving plan as presented. Motion carried with a unanimous voice vote of 4-0-0.

c. **Discuss potential reconstruction of Grove Street.**
Village Board members brought up the potential reconstruction of Grove Street and suggested that it be included with the bike path and Clark Street project in 2021. Larson explained that this is not a high traffic street and that it has no base. Committee members discussed possible options for the street and felt that it would be best addressed as an alternate bid with the Clark Street and bike path project in 2021. After bids for the repairs for Grove Street are received, the committee will decide the best option. No formal action was taken.

d. **Discuss Village road salt use, policy and practice.**
Larson explained that there is no specific salt quantity identified in the Snow and Ice Control Program Policy. Right now, the Village is following a reactive approach that was brought forth in the past by a former Village Board. Larson believes that formalizing a reduction in salt usage plan will be the challenge. Committee members brought up the idea of trying a pilot program and discussed possible alternatives to the heavy salt usage. Salting at/near intersections only, utilizing salt/sand mixtures, sand in place of salt on some roads and only salting main roads were just a few ideas that were discussed as possibilities. No formal action was taken at this time.

6. **Engineers Report**

Quarry Ridge Subdivision
All public utilities are completed. The curb and gutter are installed for Phase A (the first phase). The street has been proof rolled and Payne & Dolan placed the binder course of pavement today. Deed restrictions have been lifted for lot sales.

Main Street Bike Path
Restoration was completed except for where private utilities are raising their pedestals and cabinets.

Cottage Grove Road Rehab
Restoration has been completed.

Buss Road / Cottage Grove Road Intersection Plan
MSA prepared a plan to align Buss Road through the Cottage Grove intersection.

Shady Grove Subdivision
Sewer permits have been moved from MMSD to the WDNR for approval.

5th Addition to Westlawn Estates
MSA is issuing a land disturbance permit with surety for the developer to proceed with earthwork during the completion of the developer's agreement.

Oakstone Recreational Facility
The project is substantially complete with minor finishes remaining such as the fence and gate at the lift station. The surety is being held until this completed.

Madison Window Cleaning
MSA provided fire flow of the water system to the building plumber designer and located the water service.

Cottage Grove Commons
MSA completed the plan review and will issue a land disturbance permit and surety for the earthwork

while the developer's agreement is completed. The project constructs N. Windsor Avenue at Gaston Road. The roadway follows a 12-inch diameter sanitary sewer installed in 2003 and adds watermain that connects to the 16-inch main in Gaston Road.

Monona Grove Elementary School
The developer's agreement was approved last night.

Other
In order to receive funds from the MLS Fund all roads must be rated in 2019 and submitted for consideration by December. Maloney explained that the Village will not qualify for this funding since the intersection at Buss Road and Cottage Grove Road (CTH BB) will be partly in Dane County's jurisdiction and Buss Road was not rated by the Village in 2019. Dane County is keeping jurisdiction of Cottage Grove Road (CTH BB).

7. **Directors Report**
The two new Public Works Technicians started on September 9. One passed his GDL last Friday and the other is still studying/training for the CDL. Staff did a remarkable job as always with the recent snowfall, despite having two staff members on previously planned vacations and the two newest staff members unable to operate full-size plow trucks.

Sidewalk repairs have been completed for the year and invoices were sent out. Street work planning for 2020 is in progress. Rating of all Village streets was completed and submitted to the DOT recently. Based on the information collected, it was recommended to repave West Parkview Street in 2020. This information will be updated and used to update repaving and maintenance treatment plans.

Larson attended the League of Wisconsin Municipalities Annual Conference for the first time on October 24-25. There were a number of good sessions related to public works that will be valuable to us in the near future. Of note, traffic calming and roundabouts, flood mitigation and code/approval requirements to deal with stronger and more frequent rain events.

8. **Approve the minutes of the September 4, 2019 Public Works & Properties Committee meeting.**
Motion by Kieck, seconded by Hackel, to approve the September 4, 2019 Public Works and Properties Committee meeting minutes as presented. Motion carried with a voice vote of 3-0-1 with Schuerman abstaining.

9. **Set tentative date for next meeting.**
The next meeting is tentatively scheduled for Tuesday, December 3, 2019 at 6:00 pm.

10. **Future Agenda Items**
    - Discuss road salt pilot program
    - Discuss leaf collection

11. **Adjournment**
Motion by Hackel, seconded by Kieck, to adjourn at 7:23 pm. Motion carried with a voice vote of 4-0-0.

Respectfully submitted by Kristen Krause, Utility Clerk.
Approved on: __/__/19__

These minutes represent the general subject matter discussed in this meeting but do not reflect a verbatim discussion of the subjects and conversations that took place.

Village of Cottage Grove Notice of Public Meeting

PLAN COMMISSION

Wednesday, January 8, 2020 6:30 P.M. Village Hall
221 E Cottage Grove Rd.

1. Call to Order

2. Determination of Quorum and That the Agenda Was Properly Posted

3. Pledge of Allegiance

4. PUBLIC APPEARANCES-Public's Opportunity to Speak About Any Subject That Is Not A Specific Agenda Item

5. Discuss and Consider the Minutes from The Plan Commission Meeting of November 13, 2019.
Documents: 11-13-19 PLAN COMMISSION MINUTES.PDF

6. PUBLIC HEARING: Opportunity for Public to Provide Input Regarding A Request from Farris Auto to Amend an Existing Conditional Use Permit for Their Facility At 212 W. Cottage Grove Road To Permit Construction Of An Additional Paved Area Bounded By A Privacy Fence And To Review Conditions Of Operation.
Documents:

1. CG_FARRISBROS_PCMEMO_2019-12-04.PDF
2. FARRISBROS_ALL_2019-12-04_RED.PDF
3. PARKING LOT FARRIS AUTO.PDF

7. Discuss and Consider A Request from Farris Auto to Amend an Existing Conditional Use Permit for Their Facility At 212 W. Cottage Grove Road to Permit Construction of An Additional Paved Area Bounded by A Privacy Fence and To Review Conditions of The Existing Permit.

8. PUBLIC HEARING: Opportunity for Public to Provide Input Regarding A Request from Greywolf For Approval of a General Development Plan for A Hotel, Located at Parcel #0711-041-2120-1 In the Commerce Park.
Documents:

1. CG_HOTEL-GDP_2019-12-20.PDF
2. 00094071 LANDMARK DR COMFORT SUITES HOTEL REVIEW 12-30-19.PDF
3. 199415 GENERAL DEVELOPMENT PLAN.PDF
4. 199415 LOCATION MAP.PDF
5. 199415 EXISTING CONDITIONS SURVEY.PDF
6. 199415 LAND OWNERS WITHIN 400.PDF
7. CSCGWI 12-18-19 SET.PDF
8. PUD GDP APPLICATION LETTER 12.19.19.PDF

9. Discuss and Consider A Request from Greywolf For Approval of a General Development Plan for A Hotel, Located at Parcel #0711-041-2120-1 In the Commerce Park.

10. PUBLIC HEARING: Opportunity for Public to Provide Input Regarding A Request from Doundrins Distilling for Conditional Use Permit for An Outdoor Seating Area at Their Facility Located At 300 Progress Drive.

Documents:

1. CG_DOUNDRINSDISTILL-CUP_2019-12-20.PDF
2. APPFORM_CUP_DOUNDRINS_2019-12-18-SIGNED.PDF
3. LAYOUT WITH BATHROOMS2-MODEL.PDF
4. OUTDOOR DESCRIPTION.PDF
5. OWNER APPROVAL_EMAIL.PDF
6. WRITTEN JUSTIFICATION.PDF

11. Discuss and Consider A Request from Doundrins Distilling for Conditional Use Permit for An Outdoor Seating Area at Their Facility Located At 300 Progress Drive.

12.

12. Discuss and Consider A Request From The Monona Grove School District For A Site Plan Amendment For An Approximately 1,500 Sq. Ft. Addition To The Glacial Drumlin Middle School Cafeteria, Located At 801 Damascus Trail.

Documents:

1. CG_MGSD-GDCAFE-SITEAMEND_2019-12-17.PDF
2. 2019_1206 PLAN COMMISSION SUBMITTAL_GLACIAL DRUMLIN.PDF

13. Discuss and Consider A Request from Village of Cottage Grove Park & Rec Dept. For Approval of a Site Plan Amendment for Bakken Park to Permit Installation of A New Shelter And Splash Pad.

Documents:

1. CG_BAKKENPK_2019-12-02.PDF
2. PART1-00094041_BAKKEN PARK SITE PLAN AMENDEMENT APP.PDF
3. PART2-00094041_BAKKEN PARK SITE PLAN AMENDEMENT APP-2.PDF
4. PART3-00094041_BAKKEN PARK SITE PLAN AMENDEMENT APP-3.PDF

14. PUBLIC HEARING: Opportunity for Public to Provide Input Regarding A Proposed Amendment of The Village of Cottage Grove Zoning Ordinance to Create A New Single-Family Residential Zoning District with Minimum Lot Size Of 7,500 Sq. Ft.

Documents:

1. CG_RESZON_2019-12-02.PDF

15. Discuss and Consider A Proposed Amendment of The Village of Cottage Grove Zoning Ordinance to Create A New Single-Family Residential Zoning District with Minimum Lot Size Of 7,500 Sq. Ft.

16. Future Agenda Items

17. Adjournment

This agenda has been prepared by Staff and approved by the Village President as Chair of the Plan Commission for use at the meeting as listed above. Any item on the agenda is subject to final action. Notice: Persons needing special accommodations should call 608-839-4704 at least 24 hours prior to the meeting. It is possible that members of and possibly a quorum of members of other governmental bodies may be in attendance at the above stated meeting to gather information; no action will be taken by any governmental body at the above-stated meeting other than the governmental body specifically referred to above in this notice.

VILLAGE ACTION REPORT

PROJECT: Comfort Suites General Development Plan
APPLICANT: Todd Rizzo - Greywolf
PROJECT LOCATION: Parcel #0711-041-2120-1 on Landmark Drive
REPORT DATE: January 15, 2020

PROJECT DESCRIPTION: The applicant is seeking approval of a Planned Unit Development for a five-story, 82 room hotel totaling approximately 57,000 sq. ft. The hotel will be branded as a Comfort Suites, which is a CHOICE Hotels brands. Amenities will include an indoor pool, meeting room, fitness center, and an outdoor space.

PLAN COMMISSION MEETING: January 8, 2020

STAFF REPORT PROVIDED BY: _X_ Planner, _X_ Engineer, ___ Public Works

MOTION: by Broom (1st), Jushchyshyn (2nd)

The site plan was APPROVED WITH CONDITIONS, with the conditions as follows:

Planning

1. The sidewalk on Landmark Drive should be a minimum 6' wide to maintain adequate clear space around the overhang of parked cars or implement wheel stops to prevent overhang.

2. Provide exterior material samples at meetings for review of the Precise Implementation Plan.

Engineering – General Development Plan

1. The sidewalk adjoining parking lots where curb and gutter is not shown should be raised sidewalk.

2. Tree locations should be revised based on the location of the sanitary sewer line and cleanouts shown on the existing survey.

3. Verify that one half of the area of the trash enclosure is sufficient for the site in the case the properties become independently owned in the future.

4. The north side of the hotel should be reviewed. Concrete patio is planned and fenced on the property on the north side of the building which is on land owned by the other property and will limit the use of that land by the northerly property owner. A property line adjustment or permanent easement should be attained for the patio use to avoid concerns if properties are sold in the future.

5. The concrete patios are overtop existing storm sewer and a sanitary clean out. Access structures and drains will need to be maintained. Existing brick columns for the pergola overhang exist within the proposed concrete patio area.

VOTE: _5_ Aye, _0_ Nay, _0_ Abstain

APPLICANT COMMENTS:

- (Todd Rizzo - Greywolf) – provided an overview of the site plan and hotel branding and operations. Also provided overview of the neighborhood meeting held on January 7, 2020.

PLAN COMMISSION COMMENTS:

- (Schulze) – do rooms on the first floor face the proposed patio/BB Jack's? Rizzo replied there are no guest rooms on the first floor. Some rooms above look out over the proposed patio.
- (Broom) – asked applicant to consider car charging stations and public pool passes.
- (Schulze) – will there be a monument sign? Rizzo replied they are not sure if one is required by the brand. They will know when they submit the PIP.
- (Ratcliff) – asked if Summit approval was a similar process? Ruth replied yes, they are both Planned Unit Developments. Giese noted that a Planned Unit Development essentially creates a unique zoning district for a specific project.

PUBLIC HEARING COMMENTS:

- None

STAFF COMMENTS:

- See planning staff report.

ARCHITECTURAL REVIEW COMMITTEE MEETING: January 15, 2020

STAFF REPORT PROVIDED BY: _X_ Planner, _X_ Engineer, ___ Public Works

MOTION: by Hackel (1st), Knudtson (2nd)

The General Development Plan was APPROVED WITH CONDITIONS, with the conditions as follows:

1. Pending submittal of the Precise Implementation Plan.

VOTE: _4_ Aye, _0_ Nay, _0_ Abstain

APPLICANT COMMENTS:

- (Todd Rizzo - Greywolf) – provided an overview of the site plan and hotel branding and operations. Described the proposed insulated concrete form system which is more energy efficient but places some limitations on façade design. Noted CHOICE Hotels is in the process of rebranding Comfort Suites and this would likely be the first in the country with the new design.

ARCHITECTURAL REVIEW COMMITTEE COMMENTS:

- (Williams) – will the hotel be LEED certified? Rizzo replied they will not be seeking certification.
- (Hackel) – thinks the project is a good fit for the Commerce Park. Has some concerns related to the tight site, including potential for white EIFS to look dirty over time due to proximity to people walking nearby and lack of landscaping next to the building, particularly on the west side facing Highway N. The ARC discussed various options including removing a couple of parking spots to create space for additional landscaping. The applicant will work on a preferred option for the PIP submittal. Asked if there will be signage on the north side? Rizzo replied it's possible and final signage will be determined for the PIP.

PUBLIC COMMENTS:

- None

STAFF COMMENTS:

- See planning staff report.

PLANNING STAFF REPORT

MEMO DATE: December 20, 2019
MTG. DATE: **JANUARY 8, 2020**

TO: Village of Cottage Grove Plan Commission

CC: Village of Cottage Grove Board of Trustees
Matt Giese – Village Administrator
Lisa Kalata – Village Clerk
Lee Boushea – Village Attorney
Kevin Lord – Village Engineer

FROM: Erin Ruth, AICP – Village Planning Director

RE: **Comfort Suites Hotel – General Development Plan**

BACKGROUND

Property Owner:	Badger Hotel Group/Greywolf Partners
Location:	Parcel #0711-041-2120-1 on Landmark Dr.
Area:	approx. 57,000 sq. ft.
Agent:	Todd Rizzo – Greywolf Partners
Existing Zoning:	Planned Office
Proposed Zoning:	Planned Unit Development
Future Land Use Plan:	Planned Business

OVERVIEW

The applicant is seeking approval of a Planned Unit Development for a five-story, 82 room hotel totaling approximately 57,000 sq. ft. The hotel will be branded as a Comfort Suites, which is a CHOICE Hotels brand. Amenities in the building will include an indoor pool, fitness room, meeting room, breakfast area, and an outdoor space.

The scale of the project does not comply with the current PO, Planned Office zoning. Therefore, the applicant is seeking approval as a Planned Unit Development (PUD) to allow several exceptions to the base zoning.

A PUD has a two-step approval process. At the January meeting, the Plan Commission will review the first step, the General Development Plan (GDP).

LOCATION MAP

COMPREHENSIVE PLAN CONSISTENCY

Per the Planned Business description in the Land Use Chapter, "the northern and western edges of the (Commerce) Park, with their visual exposure to I-94 and CTH N, are improved for Planned Business development which may consist of retail, high quality office, and supporting land uses such as quality restaurants, lodging facilities, and financial institutions."

In addition, several Planned Business policies are relevant to this project. Policy #1 states that "the Planned Business uses around the interchange of I-94 and CTH N will serve as a "gateway" into the Village from other locations inside and outside of the region and reflect the image of the Village to passers-by. Due to the location, particular attention should be given to ensuring that development is of a high aesthetic quality."

Policy #7 states "encourage Planned Business development that occurs along major transportation corridors (e.g. Interstate 94 and CTH N, CTH BB) to contribute toward establishing and enhancing a positive image for the Village. The developments that are built along these corridors and surrounding interchange areas are highly visible to residents and visitors, and can help establish an attractive image for the Village."

The proposed project complies with the design guidelines in polices #9 and #10 for the Planned Business district.

The Economic Development chapter of the Comprehensive Plan includes a survey of local business owners. Approximately 80% of respondents felt that a hotel and a meeting/event space would provide a major or minor improvement to the Cottage Grove business community. No respondents felt such facilities would detract from the business community.

The chapter also includes a resident survey. In that survey, approximately 70% of respondents were at least mildly interested in adding a hotel to the Village, which was one of the highest scores among the businesses listed.

The Economic Development chapter also includes a matrix indicating the desirability of various industry types in different areas within the Village. The matrix indicates that accommodations and food service are appropriate and desirable within the Commerce Park.

In the opinion of staff, the proposed project is consistent with the Village's Comprehensive Plan.

ZONING ORDINANCE CONSISTENCY

The subject property is currently zoned Planned Office. The applicant is requesting that the property be rezoned to a Planned Unit Development to accommodate features of the project that do not fit within the base zoning category.

Requested exceptions

The requested exceptions are as follows:

- The proposed building is 5 stories, while the PO zoning allows a maximum of 4.
- The proposed building is approximately 64 feet tall, while the PO zoning allows a maximum of 45 feet.
- The proposed landscape ratio for the property is 14.4%, while the minimum in the PO district is 25%.

- The floor area ratio of the proposed project is 1.0, while the maximum allowed in the PO district is 0.3.
- The proposed project has a 0-foot side setback on the north side of the property, while the minimum side setback in the PO district is 10 feet.
- The proposed project has a 0-foot street paved surface setback, while the minimum street paved surface setback in the PO district is 10 feet.

Parking

325-49(H)(11)(b) requires one parking space per room plus one space for each employee on the largest shift.

Therefore the 98 available parking spaces can accommodate the 82 rooms and up to 16 employees without making use of the spaces at the adjacent Greywolf building to the north.

STAFF RECOMMENDATIONS

Staff recommends that the General Development Plan be **APPROVED WITH CONDITIONS**, with the conditions as follows:

1. The sidewalk on Landmark Drive should be a minimum 6' width to maintain adequate clear space around the overhang of parked cars or implement wheel stops to prevent overhang.
2. Provide exterior material samples at meetings for review of the Precise Implementation Plan.

PROJECT REVIEW | COMFORT SUITES HOTEL

Village of Cottage Grove, WI

ENGINEERING REVIEWER:

Kevin Lord, P.E.

Phone: (608) 242-7779

klord@msa-ps.com

DATE:

December 30, 2019

Proposed Comfort Suites Hotel: Greywolf

REVIEW COMMENTS

MSA has reviewed the Concept Plans submitted December 20, 2019 for the proposed Comfort Suites Hotel along Landmark Drive.

INCLUDED

1. General Development Plan
2. Various building elevations

MSA will review the drainage and site civil for the project following the submittal.

General Development Plan

1. The sidewalk adjoining parking lots where curb and gutter is not shown should be raised sidewalk.
2. Tree locations should be revised based on the location of the sanitary sewer line and cleanouts shown on the existing survey.
3. Verify that one-half the area of the trash enclosure is sufficient for the site in the case the properties become independently owned in the future.
4. The north side of the hotel should be reviewed. Concrete patio is planned and fenced on the property on the north side of the building which is on land owned by the other property and will limit the use of that land by the northerly property owner. A property line adjustment or permanent easement should be attained for the patio use to avoid concerns if properties are sold in the future.
5. The concrete patio's are overtop existing storm sewer and a sanitary clean out. Access structures and drains will need to be maintained. Existing brick columns for the Pergola Overhang exist within the proposed concrete patio area.

COMFORT SUITES HOTEL

COTTAGE GROVE, WI **DATE 12.19.2019**

GENERAL DEVELOPMENT PLAN

NORTH

0 30 60

GREYWOLF PARTNERS INC

JSD Professional Services, Inc.
• Engineers • Surveyors • Planners

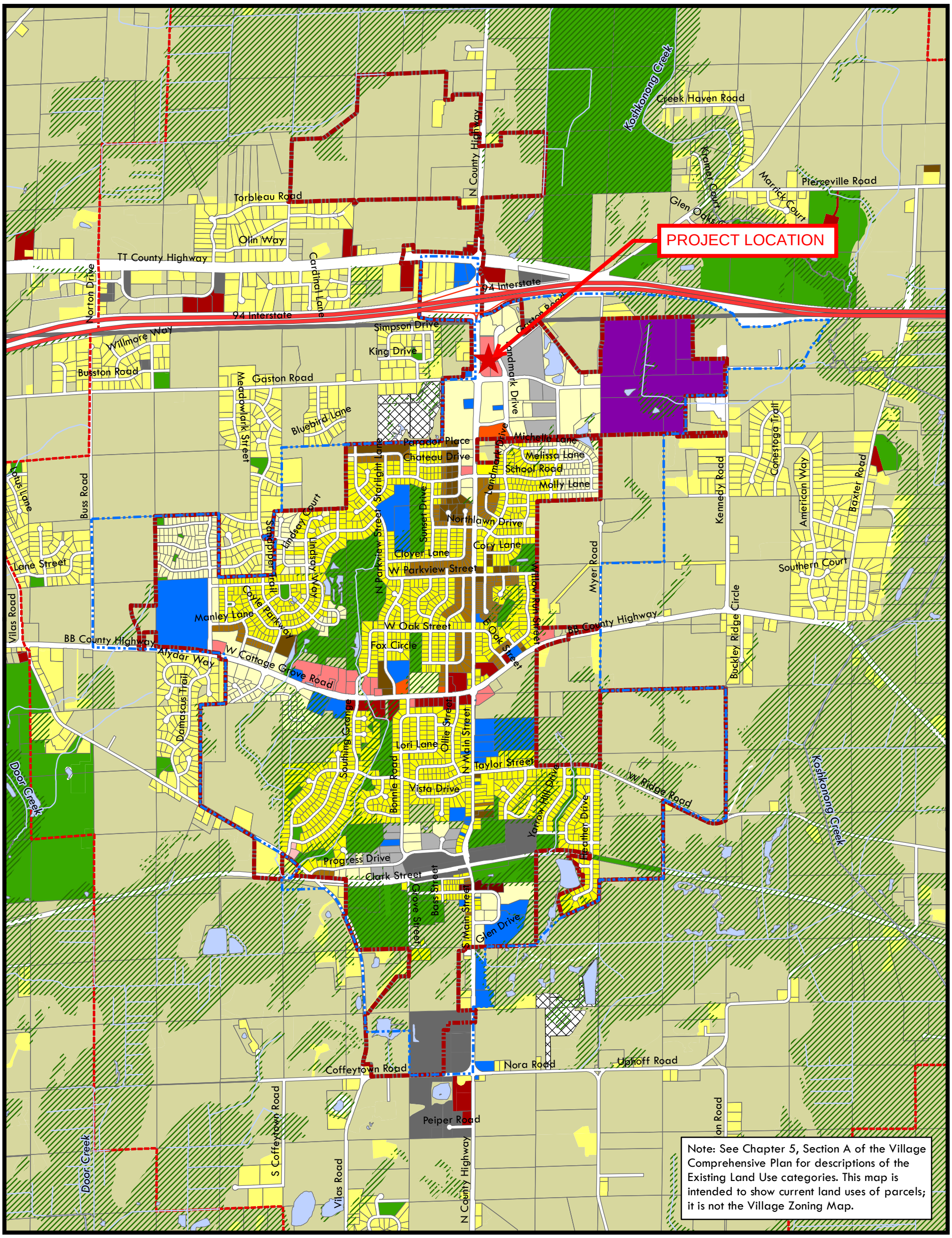

EXISTING LAND USE

MAP 4

VILLAGE OF COTTAGE GROVE COMPREHENSIVE PLAN

Amended July 21, 2014

0 0.125 0.25 0.5 Mile

Source: Village of Cottage Grove, Dane County LIO

GRAEF

- Village of Cottage Grove
- Town Boundary
- Urban Service Area
- ETJ Boundary
- Parcel Boundary
- Surface Water
- Railroad

LAND USE CATEGORIES

- Agriculture/Rural
- Single Fam. Res., Unsewer.
- Single Fam. Res., Sewered
- Two Family Res.
- Multi-Family Res.
- Neighborhood Business
- Planned Business
- General Business
- Central Mixed Use
- Planned Office
- Community Facility
- Airport
- Planned Industrial
- General Industrial
- Mineral Extraction
- Park & Open Space
- Vacant
- Environmental Corridor

EXISTING CONDITIONS SURVEY

LOT 1 OF CERTIFIED SURVEY MAP NO. 12520, BEING PART OF THE NORTHWEST QUARTER OF THE NORTHEAST QUARTER OF SECTION 04, TOWNSHIP 07 NORTH, RANGE 11 EAST, VILLAGE OF COTTAGE GROVE, DANE COUNTY, WISCONSIN.

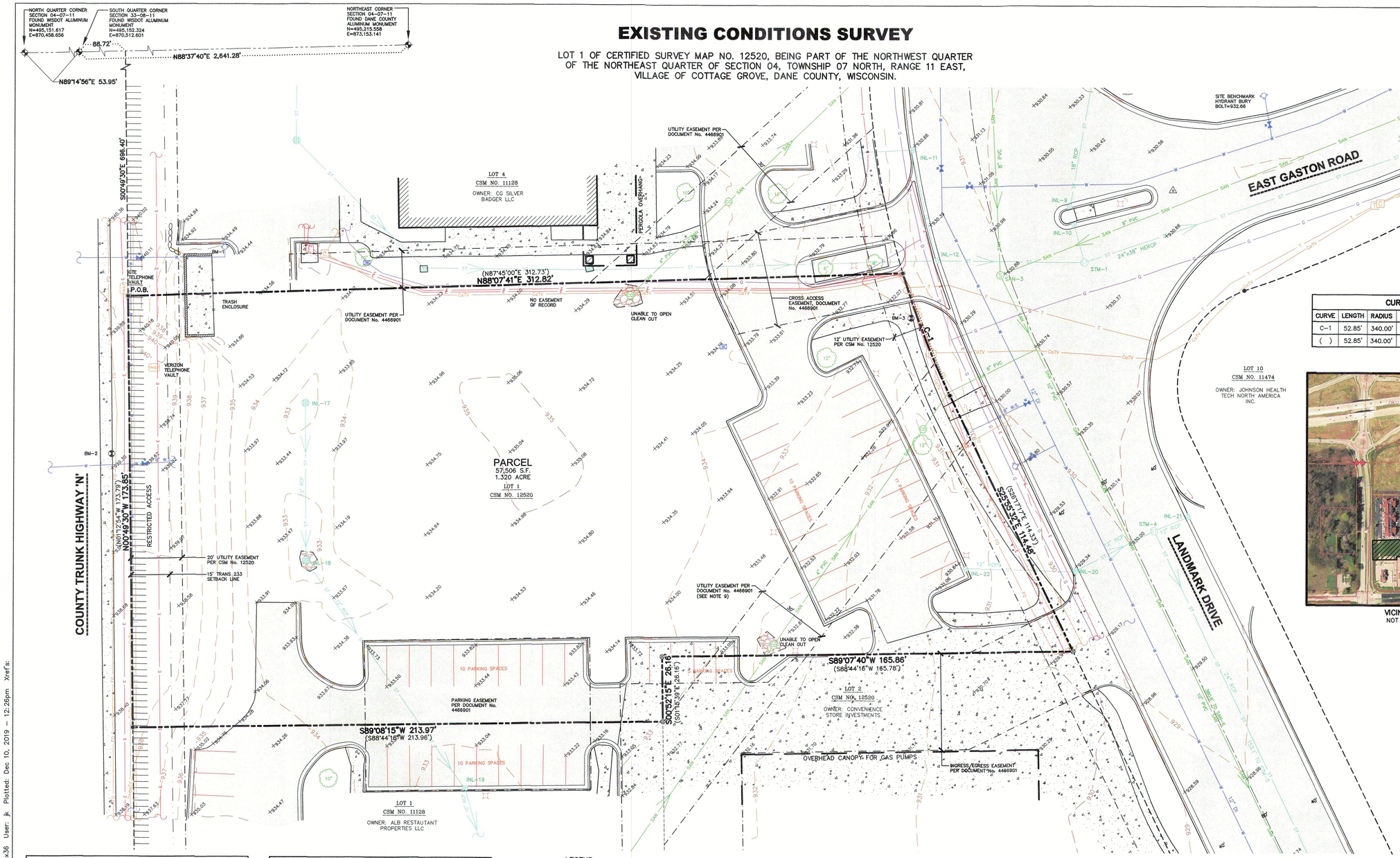

TO OBTAIN LOCATIONS OF PARTICIPANT UNDERGROUND FACILITIES BEFORE YOU DIG IN WISCONSIN

CALL DIGGERS HOTLINE
1-800-242-8511 TOLL FREE
WISCONSIN STATE STATUTE 182.0175(2)(FM) REQUIRES MINIMUM THREE (3) WORK DAYS NOTICE BEFORE YOU EXCAVATE

"THE INFORMATION SHOWN ON THIS DRAWING CONCERNING TYPE AND LOCATION OF UNDER-GROUND UTILITIES IS NOT GUARANTEED TO BE ACCURATE OR ALL INCLUSIVE. THE CONTRACTOR IS RESPONSIBLE FOR MAKING THE CONTRACTOR'S OWN DETERMINATIONS AS TO THE TYPE AND LOCATION OF UNDERGROUND UTILITIES AS MAY BE NECESSARY TO AVOID DAMAGE THERETO."

CURVE TABLE					
CURVE	LENGTH	RADIUS	DELTA	CHORD	CHORD BEARING
C-1	52.85'	340.00'	8°54'25"	52.80'	S21°18'46"E
( )	52.85'	340.00'	8°54'20"	52.79'	S21°50'07"E

VICINITY MAP
NOT TO SCALE

STORM SEWER MANHOLES					
STRUCT. ID	RIM ELEVATION	INVERT	ELEVATION	PIPE SIZE	PIPE TYPE
STM-1	930.36	N	926.31	18"	RCP
		W	926.34	18"	RCP
		NE	926.28	24"x36"	HERCP
STM-4	929.69	SW	**	12"	RCP
		NE	**	12"	RCP
		SE	923.85	24"	RCP
STM-5	928.48	NE	923.12	24"	RCP
		SW	923.15	12"	RCP
		NE	923.06	12"	RCP
		SE	923.00	24"	RCP

**=UNABLE TO GET MEASURE DOWN-CANNOT SEE PIPES

STORM SEWER INLETS					
INLET ID	RIM ELEVATION	INVERT	ELEVATION	PIPE SIZE	PIPE TYPE
INL-11	930.42	W	926.88	18"	RCP
		S	926.86	18"	RCP
INL-12	930.32	N	926.72	18"	RCP
		W	926.77	18"	RCP
		E	926.71	18"	RCP
INL-17	932.54	S	928.44	12"	RCP
INL-18	932.08	N	928.08	12"	RCP
		SE	928.08	12"	RCP
INL-19	932.39	NW	927.69	12"	RCP
		S	927.69	15"	RCP
INL-20	929.14	NW	927.06	12"	HDPE
		NE	926.84	12"	RCP
INL-21	929.37	SW	926.94	12"	RCP
INL-22	931.31	SE	*	12"	HDPE

*=UNABLE TO GET MEASURE DOWN-CAR PARKED OVER STRUCTURE

SANITARY SEWER MANHOLES					
STRUCT. ID	RIM ELEVATION	INVERT	ELEVATION	PIPE SIZE	PIPE TYPE
SAN-3	930.81	N	917.04	8"	PVC
		NE	917.04	8"	PVC
		SE	916.91	10"	PVC
SAN-6	927.75	NW	915.75	10"	PVC
		S	915.65	10"	PVC

BENCHMARKS		
BENCH MARK	ELEVATION	DESCRIPTION
BM-1	937.12	BURY BOLT ON HYDRANT, NORTHWEST CORNER OF SITE
BM-2	939.34	CUT CROSS IN SIDEWALK, WEST SIDE OF SITE
BM-3	937.18	CUT CROSS IN SIDEWALK, EAST SIDE OF SITE
BM-4	932.66	BURY BOLT ON HYDRANT, NE QUADRANT OF LANDMARK AND E. GASTON

*JSD DOES NOT GUARANTEE THAT THE BENCHMARK ELEVATIONS LISTED ON THIS MAP HAVE NOT BEEN DISTURBED SINCE THE DATE OF THIS SURVEY AND SHOULD BE VERIFIED PRIOR TO CONSTRUCTION ACTIVITIES.

LEGEND

- GOVERNMENT CORNER
- 1" IRON PIPE FOUND
- 3/4" REBAR FOUND
- CHISELED 'X' SET
- SANITARY MANHOLE
- CLEAN OUT
- HYDRANT
- WATER VALVE
- SPRINKLER VALVE BOX
- STORM MANHOLE
- ROUND CASTED INLET
- CURB INLET
- ELECTRIC TRANSFORMER
- LIGHT POLE
- VAULT
- TELEPHONE PEDESTAL
- CABLE PEDESTAL
- DECIDUOUS TREE
- PARCEL BOUNDARY
- RIGHT-OF-WAY LINE
- CHORD LINE
- CENTERLINE
- SETBACK LINE
- SECTION LINE
- PLATTED LOT LINE
- EASEMENT LINE
- FENCE LINE
- STONE WALL
- EDGE OF PAVEMENT
- CONCRETE CURB & GUTTER
- SAN — SANITARY SEWER
- W — WATER LINE
- ST — STORM SEWER
- G — NATURAL GAS
- E — UNDERGROUND ELECTRIC
- FO — FIBER OPTIC
- T — UNDERGROUND TELEPHONE
- CaTV — UNDERGROUND CABLE
- BUILDING
- 935 — INDEX CONTOUR
- 934 — INTERMEDIATE CONTOUR
- x934.29 SPOT ELEVATION
- BITUMINOUS PAVEMENT
- CONCRETE PAVEMENT
- PAVEMENT STRIPING
- END OF FLAGGED UTILITIES
- ( ) DENOTES RECORD DATA DEPICTING THE SAME LINE ON THE GROUND AS RETRACED BY THIS SURVEY
- RESTRICTED ACCESS

NOTES

1. FIELD WORK PERFORMED ON NOVEMBER 25, 2019.
2. BEARINGS FOR THIS SURVEY AND MAP ARE REFERENCED TO THE WISCONSIN COUNTY COORDINATE SYSTEM, DANE COUNTY. THE NORTH LINE OF THE NORTHEAST QUARTER OF SECTION 04-07-11, RECORDED AS N88°37'40"E.
3. ELEVATIONS ARE BASED ON THE NORTH AMERICAN VERTICAL DATUM OF 1988 (NAVD88). BENCHMARK IS A WISDOT ALUMINUM MONUMENT MARKING THE NORTH QUARTER CORNER OF SECTION 04, T07N, R11E, ELEVATION = 944.61'
4. CONTOUR INTERVAL IS ONE FOOT.
5. SPOT ELEVATIONS IN CURBED AREAS REFERENCE THE PAVEMENT EDGE ELEVATIONS.
6. SUBSURFACE UTILITIES AND FEATURES SHOWN ON THIS MAP HAVE BEEN APPROXIMATED BY LOCATING SURFICIAL FEATURES AND APPURTENANCES, LOCATING DIGGERS HOTLINE FIELD MARKINGS AND BY REFERENCE TO UTILITY RECORDS AND MAPS. DIGGER'S HOTLINE TICKET NO. 20194707392, WITH A START DATE OF NOVEMBER 25, 2019.
7. UTILITY COMPANIES CONTACTED THRU DIGGERS HOTLINE:
   VILLAGE OF COTTAGE GROVE
   CHARTER COMMUNICATIONS
   WIN, LLC
   TDS METROCOM
   ALLIANT ENERGY (ELECTRIC AND GAS)
   FRONTIER COMMUNICATIONS
   CITY OF MADISON ENGINEERING
   WE ENERGIES
8. BEFORE EXCAVATION, APPROPRIATE UTILITY COMPANIES SHOULD BE CONTACTED. FOR EXACT LOCATION OF UNDERGROUND UTILITIES, CONTACT DIGGERS HOTLINE, AT 1.800.242.8511.
9. PROPOSED UTILITIES (GAS, ELECTRIC AND TELEPHONE) AS SHOWN ON EXHIBIT C-2 IN DOCUMENT No. 4466901 WERE NOT FIELD MARKED BY DIGGERS HOTLINE, BUT MAY EXIST AND ARE LIKELY PRIVATE SERVICE LINES.

LEGAL DESCRIPTION

LOT 1, CERTIFIED SURVEY MAP NO. 12520, RECORDED IN VOLUME 78 OF DANE COUNTY CERTIFIED SURVEY MAPS ON PAGES 186-187 AS DOCUMENT NUMBER 4460942, VILLAGE OF COTTAGE GROVE, DANE COUNTY, WISCONSIN.

TAX KEY NO: 112/0711-041-2120-1

SURVEYOR'S CERTIFICATE

I, JOHN KREBS, WISCONSIN PROFESSIONAL LAND SURVEYOR NO. S-1878, HEREBY CERTIFY THAT UNDER THE DIRECTION OF GREYWOLF PARTNERS THIS SURVEY AND MAP HAS BEEN PREPARED AND COMPLIES WITH WISCONSIN ADMINISTRATIVE CODE A-E7 AND IS CORRECT TO THE BEST OF MY KNOWLEDGE AND BELIEF IN ACCORDANCE WITH THE INFORMATION PROVIDED.

JOHN KREBS, S-1878
PROFESSIONAL LAND SURVEYOR

12/10/19
DATE

WISCONSIN JOHN KREBS S-1878 McFARLAND, WISCONSIN LAND SURVEYOR

JSD Professional Services, Inc.
Engineers • Surveyors • Planners

CREATE THE VISION TELL THE STORY

MADISON | MILWAUKEE
KENOSHA | APPLETON | WAUSAU

MADISON REGIONAL OFFICE
161 HORIZON DRIVE, SUITE 101
VERONA, WISCONSIN 53593
P. 608.848.5060

CLIENT:
GREYWOLF PARTNERS

CLIENT ADDRESS:
115 SOUTH 84th ST., SUITE 275
MILWAUKEE, WI 53214

PROJECT:
LOT 1, C.S.M. No. 12520

PROJECT LOCATION:
VILLAGE OF COTTAGE GROVE
DANE COUNTY, WISCONSIN

north
SCALE IN FEET
20' 0 20'
SCALE 1" = 20'

Design/Drawn:	JK 11/26/19
Approved:	TJB 11/26/19

SHEET TITLE:
EXISTING CONDITIONS SURVEY

SHEET NUMBER:
1 OF 1

JSD PROJECT NO: 19-9415

THESE PLANS AND DESIGNS ARE COPYRIGHT PROTECTED AND MAY NOT BE USED IN WHOLE OR IN PART WITHOUT THE WRITTEN CONSENT OF JSD PROFESSIONAL SERVICES, INC.

File: I:\2019\199415\DWG\Survey\Survey Sheets\199415 Excon.dwg Layout: 24x36 User: jk Plotted: Dec 10, 2019 - 12:26pm Xref's:

Cottage Grove Comfort Suites Adjacent Property Owners

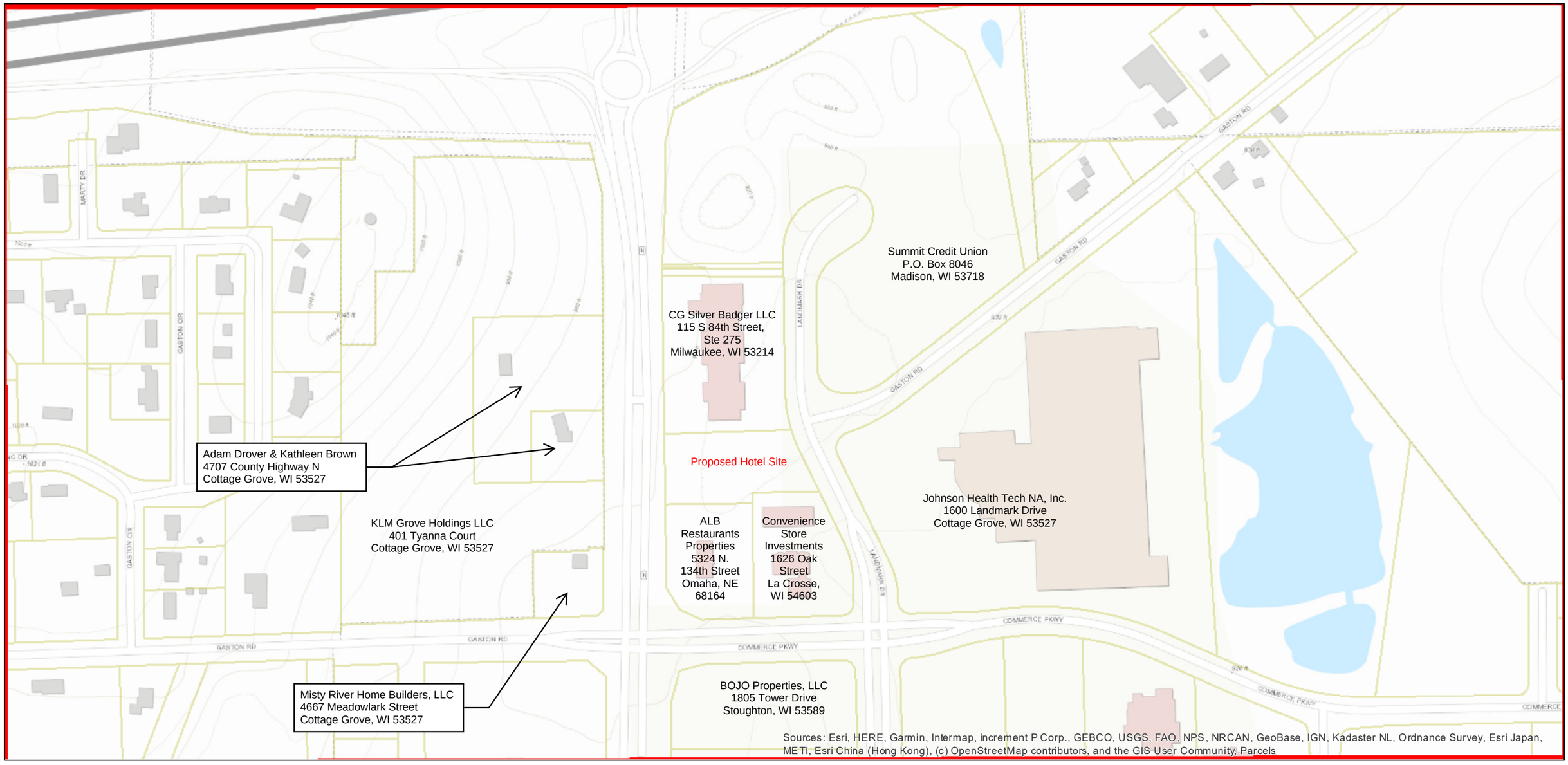

December 18, 2019

Parcels

0 155 310 620 Feet

N

Comfort
SUITES

Comfort
SUITES

Comfort
SUITES

Comfort
SUITES
Comfort
SUITES

Comfort
SUITES
Comfort
SUITES

Comfort
SUITES

GREYWOLF
PARTNERS, INC

December 19, 2019

Mr. Erin Ruth
Director of Planning and Development
Village of Cottage Grove
221 East Cottage Grove Road
Cottage Grove, WI 53527

Re: PUD – Application and General Development Plan
Badger Hotel Group, LLC
Parcel ID No.: 112/0711-041-2120-1
Commerce Business Park
Cottage Grove, Wisconsin

Dear Mr. Ruth,

Please accept the following as an application for rezoning Parcel ID No. 112/0711-041-2120-1, which is currently zoned PO (Planned Office) to a Planned Unit Development (PUD). Per discussions with the Village over the past year and our market research, the project we are proposing and the request to have this parcel rezoned to a PUD will allow for a Comfort Suites Hotel to be developed as described herein and provide the best chance of success given the recent and expected business growth in the Village of Cottage Grove. We respectfully submit to the Village this application and accompanying documentation for review and consideration by the Village's staff, Village Plan Commission and Village Board for approval of the General Development Plan (GDP).

Supporting Information:

1. Location Map
2. Project Themes / Images (Renderings)
3. General Development Plan (Site Plan)
4. Conceptual Landscaping Design (Site Plan and Renderings)
5. Conceptual Signage (Renderings)

Project Name:
Comfort Suites Hotel
Parcel ID No.: 112/0711-041-2120-1
Commerce Business Park
Cottage Grove, WI 53527

115 S. 84th Street, Suite 275 Milwaukee, WI 53214
Office: 877.543.4739
www.greywp.com

Applicant: Badger Hotel Group, LLC
1609 Landmark Dr., Ste. 106
Cottage Grove, WI 53527

Developer: Greywolf Partners, Inc.
1609 Landmark Dr., Ste. 106
Cottage Grove, WI 53527

Architect: WB Design
Eli Hershberger & Bruce Brotherton
6834 Country Road 672, Ste. 102
Millersburg, OH 44654

Civil Engineer: JSD Professional Services, Inc.
161 Horizon Drive, Suite 101
Verona, WI 53593

Project Location Map

The subject property of this application is located in the Village of Cottage Grove Commerce Park, off of County Highway N. It is an open lot bounded by County Highway N on its west, a retail center with an address of 1609 Landmark Drive to its North, and Kwik Trip and Arby's on the south. The property is identified by parcel no., 112/0711-041-2120-1, and is approximately 1.320 acres or 57,506 square feet. Please see the attached existing conditions survey and location map of the subject property and its vicinity at 11 x 17 inches.

Vicinity Map

Included herewith is a vicinity map identifying all neighboring land or property owners within 400' of the subject property for this proposed PUD.

General Project Themes and Images

The proposed development for the subject property is a five (5) story, 82 room mid-scale hotel that will be approximately 11,400 square feet at the ground floor and be branded as a Comfort Suites, which is part of the Choice Hotels family of brands. The renderings provided are for conceptual understanding only and to provide perspective for the general size, height, width, landscaping, parking lot and signage that will occupy this property. Final design elements have yet to be decided, but the intent is to develop an attractive, upscale looking hotel that continues to enhance the look and feel of the Commerce Park and compliments the surrounding buildings. The specific design features and materials of the hotel will be submitted for approval at the Precise Implementation Plan phase of this project.

115 S. 84th Street, Suite 275 Milwaukee, WI 53214
Office: 877.543.4739
www.greywp.com

Architecture and Materials

The following renderings are being provided only for illustrative purposes to show the style of architecture and materials being considered for this project. The details of the building are still being designed and will be submitted for approval at the Precise Implementation Plan phase of this project. As noted above, the intent is to develop a five (5) story mid-scale hotel that complies with the Comfort Suites and Choice Hotel franchise standards for room quantity and quality.

The building structure will be an insulated concrete form (ICF) framed structure with metal bar joists and concrete floor system with metal decking. Exterior finishes will include a blend of stone/brick/metal/EFIS per CHOICE brand standards. Ownership is working with the architect to design the building with an attractive and cost-effective appearance that is compatible with the surrounding buildings and matches the Comfort Suites newly released exterior design standards by CHOICE. Interior finishes will also be in accordance with Comfort Suite brand standards.

General Mix of Land Uses

The proposed hotel will be a suite only hotel and have a mix of king and double queen suites with the same types of rooms available as ADA accessible rooms as well. The floor plan of the proposed hotel provides for a entry from the south side of the building, an indoor pool with equipment room, fitness center, meeting room that can be rented by the public, breakfast/food prep service area, an outdoor space that guests can enjoy, and easy access to the amenities in the retail center on the north side of the property. The plan currently provides for 98 surface parking spaces, which meets the requirement of one stall per room and the max number of employees on site at any given time. A site plan is attached for review.

Approximate nonresidential intensities

The proposed nonresidential intensity at full build-out is:

- Floor Area Ratio (FAR): Approximately 1.0 (PO district maximum noted as 0.3)
- Landscape surface area ratio: Currently shown as approximately 14.4% (PO district minimum noted as 25%)

The total (gross) floor area of nonresidential space is approximately 57,000 square feet. The FAR is calculated by dividing 57,000 by 57,506 to arrive at approximately 1.0.

General treatment of natural features

The site is currently open space and relatively flat with a slight topography that slopes from west to east. The site will utilize the existing Village stormwater systems that are in place and surround the subject property.

General relationship to nearby properties and public streets

The proposed hotel will be sized and designed to compliment the existing properties in the park. The site sits lower than County Highway N on the west side, which will aid to the visual scale of the building, and slopes towards Landmark Drive. A dumpster enclosure is currently located on the northwest side of

115 S. 84th Street, Suite 275 Milwaukee, WI 53214
Office: 877.543.4739
www.greywp.com

the building for the retail center to the north, which may also be utilized or augmented for the hotel's use to minimize the need for additional enclosures. The parking lot will wrap around the west, south and east portions of the building, blending with existing parking for Arby's and Kwik Trip, as well as enhancing the functionality of the retail facilities parking and traffic flow to the north by allowing traffic flow from the retail center to continue around the perimeter of the two properties, whereas currently customers must turn around and exit the way they entered on the north side of the retail center.
The driveway entrances to the hotel will not require additional cut-ins and will make use of existing driveways on Landmark Drive.

Sewer, water and electrical utilities are existing, adjacent to and extending into the subject parcel.

General relationship of the project to the Comprehensive Master Plan

The architecture and materials proposed are consistent with the policies in the Comprehensive Master Plan. The proposed use compliments the uses already in place in the park and will provide additional support to the commercial uses already in existence (e.g., various restaurants in the Park, lodging for business travelers doing business in the park or in the surrounding area).

Statement regarding why PUD zoning is proposed

It was determined that some of the proposed improvements to this site for a hotel would not be permitted in the current PO zoning district. These items included the following:

- The number of floors being proposed for the hotel is five, while current PO Zoning only allows for a maximum of four floors;
- The proposed building will be approximately 64 feet high, while the maximum height a building can be in the PO Zoning is 45';
- The minimum landscape surface ratio allowed in the PO is 25% minimum greenspace/pervious surface, while the proposed site will have a landscape surface ratio of approximately 14.4%;
- The maximum floor area ratio in the PO Zoning is 0.3, while the floor ratio area of the proposed hotel will be approximately 1.0;
- Setbacks for both building and paved surfaces are not obtainable in the proposed plan.
- The limited green space available for this project requires us to seek an exception through PUD zoning.

Despite these challenges, a hotel on this site can compliment the existing commercial and restaurant activities, provide lodging for businesses within the Commerce Park, as well as support recreational activities in the surrounding area (e.g., hockey and rugby tournaments, golf outings, and weddings). In addition, the amenities of the hotel, such as the meeting room are valuable resources that will be available for the public's use.

115 S. 84th Street, Suite 275 Milwaukee, WI 53214
Office: 877.543.4739
www.greywp.com

Zoning standards of the most comparable standard zoning district

Zoning Standards	PO	Proposed Development
Land use	Office	Commercial Indoor Lodging
Floor Area Ratio	0.3	Approximately 1.0
Min. landscape surface ratio	25%	Approximately 14.4%
Building front or street setback (east side/Landmark Drive)	25 feet	25 feet
Building side setback (north and south sides)	10 feet	0 feet
Building rear setback (west/County Highway N)	30 feet	30 feet
Paved surface setback: side/rear	5 feet	0 feet
Paved surface setback: street	10 feet	0 feet
Maximum Height / Floors	45 feet / 4 floors	64 Feet / 5 floors
On-site parking		1 space / bedroom + 1 space for each employee on the largest shift. Exceed Requirement. 90 stalls provided on site. 8 additional stalls provided under shared parking easement with neighboring property owners to the south. Additional parking is available at retail property to the north which is owned by an affiliated entity.

General conceptual landscape plan

The General Conceptual Landscape Plan treatment of site areas is depicted in the attached site plan and renderings.

Conceptual signage plan

The attached renderings illustrate preliminary signage locations for the project. Currently, a professionally designed, brand designated, monument sign and internally lit building signage that is proportionate to the scale of the building are being considered.

Written justification for the proposed planned unit development

A Planned Unit Development (PUD) is appropriate for this site in order to bring a commercial indoor lodging facility (hotel) to the commerce park that meets the needs and expected growth of the commerce park and Village of Cottage Grove community.

115 S. 84th Street, Suite 275 Milwaukee, WI 53214
Office: 877.543.4739
www.greywp.com

The building, as proposed, will not only enhance the character of the commerce park and provide a much needed service to the businesses that operate within it, but it will also bring a needed service to the Village of Cottage Grove's residents that supports personal, business and recreational activities within the community. We look forward to discussing this project with the Village further and answering any questions.

We appreciate your help with this zoning application.

Sincerely,

Todd Rizzo
Senior Vice President
Greywolf Partners, Inc.

115 S. 84th Street, Suite 275 Milwaukee, WI 53214
Office: 877.543.4739
www.greywp.com

VILLAGE ACTION REPORT

PROJECT: Doundrins Distilling Conditional Use Permit
APPLICANT: Abby Abramovich – Doundrins Distilling
PROJECT LOCATION: 300 Progress Drive
REPORT DATE: January 13, 2020

PROJECT DESCRIPTION: The current request is for another Conditional Use Permit to allow the applicant to operate an outdoor component to the tasting room. The property currently includes a fenced area comprising approximately 11,000 sq. ft. with a gravel surface that was previously used to store vehicles. The applicants plan to add restrooms and a bar along the existing building with a new 12' x 24' stage on the north side of the fenced area. The stage will have a permanent power source and is intended primarily for live music. The small bar and restrooms will be enclosed and air conditioned.

PLAN COMMISSION MEETING: January 8, 2020

STAFF REPORT PROVIDED BY: _X_ Planner, ___ Engineer, ___ Public Works

MOTION: by Schulze (1st), Jushchyshyn (2nd)

The Conditional Use Permit was APPROVED WITH CONDITIONS, with the conditions as follows:

1. Amplified sound outdoors will be subject to an amplified noise permit from the Village.

2. Prior to painting the new parking lines, provide a plan to the Village to verify the final number of spaces provided and to ensure the layout meets the zoning ordinance.

3. The project will require a minor land disturbance permit from the Village Engineer.

VOTE: _5_ Aye, _0_ Nay, _0_ Abstain

APPLICANT COMMENTS:

- (Abby & Nick Abramovich – Doundrins Distilling) – provided an overview of the proposed outdoor space.

PLAN COMMISSION COMMENTS:

- (Ratcliff) – do they need a noise permit for every outdoor event? Ruth replied and Kalata confirmed they could have one permit approval that covers a season or regular event schedule.
- (Schulze) – asked for an estimate of capacity. Based on state code for outdoor space with no fixed seating.

PUBLIC HEARING COMMENTS:

- None

STAFF COMMENTS:

- See planning staff report.

PLANNING STAFF REPORT

MEMO DATE: December 20, 2019
MTG. DATE: **JANUARY 8, 2020**

TO: Village of Cottage Grove Plan Commission

CC: Village of Cottage Grove Board of Trustees
Matt Giese – Village Administrator
Lisa Kalata – Village Clerk
Lee Boushea – Village Attorney
Michael Maloney – Village Engineer

FROM: Erin Ruth, AICP – Village Planning Director

RE: **Doundrins Distilling Conditional Use Permit – Outdoor Space**

BACKGROUND

Property Owner:	Hogan Properties, LLC
Location:	300 Progress Drive
Area:	approx. 11,000 sq. ft. outdoor space
Agent:	Abby Abramovich – Doundrins Distilling
Existing Zoning:	Planned Industrial
Proposed Zoning:	Planned Industrial
Future Land Use Plan:	Planned Industrial

OVERVIEW

Doundrins Distilling is a new manufacturer of alcoholic beverages located at 300 Progress Drive in the Cottage Grove Business Park that opened in 2019. The distillery is leasing space within the building. In addition to the distillery, they operate a tasting room within the space. A conditional use permit was granted earlier in 2019 for the tasting room due to its size relative to the manufacturing area. The applicant also holds a liquor license allowing them to serve beer in the tasting room.

The current request is for another Conditional Use Permit to allow the applicant to operate an outdoor component to the tasting room. The property currently includes a fenced area comprising approximately 11,000 sq. ft. with a gravel surface that was previously used to store vehicles. The applicants plan to add restrooms and a bar along the existing building with a new 12' x 24' stage on the north side of the fenced area. The stage will have a permanent power source and is intended primarily for live music. The small bar and restrooms will be enclosed and air conditioned.

Much of the area will be planted with turf. Gravel will remain along the southern fence line for use by food trucks that may be invited to events. There will be a playground in the southwest corner and a propane fueled fire pit in the northwest corner.

LOCATION MAP

COMPREHENSIVE PLAN CONSISTENCY

The proposed distillery and tasting room uses are consistent with the Planned Industrial designation in the Comprehensive Plan.

ZONING ORDINANCE CONSISTENCY

The proposed outdoor space is considered an 'accessory outdoor commercial entertainment' land use, which is permitted in the PI, Planned Industrial district as a conditional accessory use.

'Accessory outdoor commercial entertainment' land uses, as defined by 325-49(H)(25), include those that are "partially or wholly outside of an enclosed building, and are incidental to the principal activity conducted on the subject property." Examples listed in the ordinance include outdoor dining for more than 20 patrons and bars located outdoors. Three of the four regulations listed in the ordinance for this land use pertain to limitations when the project is adjacent to a residentially zoned property. The subject property is not adjacent to a residentially zoned property, so those regulations are not applicable to this project.

The fourth regulation states "any amplified noise requires a sound amplification permit." Such a permit shall be obtained prior to any outdoor musical or other amplified events being held.

The proposed project complies with the regulations for the Planned Industrial district per 325-41(A).

CONDITIONAL USE PERMIT CRITERIA

325-111(D)(2) of the zoning ordinance requires a proposed conditional use to be compliant with standards (a) to (f) of that section. In the opinion of staff, the proposed use is compliant with those standards as outlined below.

a) *The proposed conditional use (the use in general, independent of its location) is in harmony with the purposes, goals, objectives, policies, and standards of the Village of Cottage Grove's Comprehensive Master Plan, this chapter and any other plan, program, or ordinance adopted or under consideration pursuant to official notice by the Village.*

   The proposed use represents the expansion of a local business and it provides social space and an entertainment option for local residents while also serving as a destination for non-residents.

b) *The proposed conditional use (in its specific location) is in harmony with the purposes, goals, objectives, policies, and standards of the Village of Cottage Grove's Comprehensive Master Plan, this chapter and any other plan, program, or ordinance adopted or under consideration pursuant to official notice by the Village.*

The proposed use is accessory to the manufacturing use which is clearly consistent with the planned industrial land use as described by the comprehensive plan.

c) *The proposed conditional use, in its proposed location and as depicted on the required site plan, does not result in substantial or undue adverse impacts on nearby property, the character of the neighborhood, environmental factors, traffic factors, parking, public improvements, public property or rights of way, or other matters affecting the public health, safety, or general welfare either as they now exist or as they may in the future be developed as a result of implementation of the provisions of this chapter, the Comprehensive Master Plan, or any other plan, program, map or ordinance adopted or under consideration pursuant to official notice by the Village or other government agency having jurisdiction to guide development.*

While there is always some danger of disruptive activities in and around a business providing alcohol, the site is fenced in and well contained. The area around the property is entirely industrial which further minimizes any impacts, and the hours of operation (evenings) are not in conflict with surrounding businesses which generally operate during the day.

Outdoor music will be subject to an amplified noise permit.

d) *The proposed conditional use maintains the desired consistency of land uses, land use intensities and land use impacts as related to the environs of the subject property.*

The proposed use does not affect intensity or other impacts.

e) *The proposed conditional use is located in an area that will be adequately served by, and will not impose and undue burden on, any of the improvements, facilities, utilities or services provided by public agencies serving the subject property.*

The full range of urban services are available at the subject property and to the existing building, and the proposed use will not add an undue burden to any public utility or service.

f) *The potential public benefits of the proposed conditional use outweigh all potential adverse impacts of the proposed conditional use, after taking into consideration the applicant's proposal and any requirements recommended by the applicant to ameliorate such impacts.*

The proposed use is not anticipated to create adverse impacts on the Village or neighboring properties, while the potential public benefits are several, including:

1. Many breweries, wineries, and distilleries have become tourist destinations in recent years. The distillery is the first such business in the Village. The proposed outdoor space will only enhance their ability to draw tourists.
2. The proposed space has potential to act as a social gathering place for residents while providing new entertainment options.

STAFF RECOMMENDATIONS

Staff recommends that the requested Conditional Use Permit be **APPROVED WITH CONDITIONS,** with the conditions as follows:

1. Amplified sound outdoors will be subject to an amplified noise permit from the Village.

2. Prior to painting the new parking lines, provide a plan to the Village to verify the final number of spaces provided and to ensure the layout meets the zoning ordinance.

3. The project will require a minor land disturbance permit from the Village Engineer.

CONDITIONAL USE PERMIT APPLICATION

VILLAGE OF COTTAGE GROVE

APPLICANT: DOUNDRINS DISTILLING

APPLICANT ADDRESS: 300 Progress Dr. Units E & F

APPLICANT TELEPHONE: 262-357-4482

APPLICANT EMAIL ADDRESS: abby@doundrinsdistilling.com

Note: Applicant must be owner of the property where conditional use is requested, or signed letter from property owner acknowledging application must be provided.

PROPERTY ADDRESS: 300 Progress Dr. Unit E

ZONING CLASSIFICATION: PI, PLANNED INDUSTRIAL

CONDITIONAL USE REQUESTED:

Outdoor tasting room space

Applicant Signature: Abby Ohrmund **Date:** 12/19/2019

PROVIDE THE FOLLOWING ITEMS:

1. Submittal materials per 325-111(C) of the Zoning Ordinance, as described on the following pages.
2. Fee of $350.
3. Escrow deposit of $250 for consultant review. If actual review fees are less, excess will be returned. If actual review fees exceed escrow amount, applicant will be billed for the excess.

Mail or deliver the completed application form, submittal materials, and fees to the Village Hall.

Village of Cottage Grove
221 E. Cottage Grove Road
Cottage Grove, WI 53527
Telephone: (608) 839-4704
Office Hours: M-F 7:30 a.m. to 4:30 p.m.

For Office Use Only

Date Received:
Plan Commission meeting date:
Village Board meeting date:

VILLAGE OF COTTAGE GROVE PROCEDURAL CHECKLIST FOR CONDITIONAL USE REVIEW AND APPROVAL

This form should be used by the Applicant as a guide to submitting a complete application for a conditional use and by the Village to process said application. Parts I and II should be used by the Applicant to submit a complete application; Part III should be used by the Village as a guide when processing said application.

I. APPLICATION SUBMITTAL PACKET REQUIREMENTS

Prior to submitting the 20 final complete applications as certified by the Zoning Administrator, the Applicant shall submit 5 initial draft application packets for staff review, followed by one revised draft final application packet based upon staff review and comments. *Submittal materials may be submitted as pdf files via email in lieu of printed copies by arrangement with the Village Planning Director.*

Submittal Materials per 325-111(C) Date:_____ by:_____

____ ____ (a) A map of the proposed conditional use:
- ____ Showing all lands for which the conditional use is proposed;
- ____ Showing all other lands within 400 feet of the boundaries of the subject property;
- ____ Referenced to a list of the names and addresses of the owners of said lands as the same appear on the current records of the Register of Deeds of Dane County (as provided by the Village of Cottage Grove).
- ____ Clearly indicating the current zoning of the subject property and its environs, and the jurisdiction(s) which maintains control;
- ____ Map and all its parts are clearly reproducible with a photocopier;
- ____ Map size 11" by 17" shall be at a scale which is not less than one inch equals 800 feet;
- ____ All lot dimensions of the subject property provided;
- ____ Graphic Scale and north arrow provided.

____ ____ (b) A map, such as the Land Use Plan Map, of the generalized location of the subject property in relation to the Village as a whole;

____ ____ (c) A written description of the proposed conditional use describing the type of activities, buildings, and structures proposed for the subject property and their general locations;

____ ____ (d) A site plan of the subject property as proposed for development. Said Site plan shall conform to any and all the requirements of §325-803. If the proposed conditional use is a group development, a proposed preliminary plat or conceptual plat may be substituted for the required site plan, provided said plat contains all information required on said site plan;

____ ____ (e) Written justification for the proposed conditional use:
- ____ Provide written justification for the proposed conditional use consisting of the reasons why the Applicant believes the proposed conditional use is appropriate, particularly as evidenced by compliance with the standards set forth in §325-802D(2)(a) through (f).

THESE WILL BE ANSWERED BY STAFF - IF YOU HAVE INPUT, PLEASE PROVIDE IT

II. JUSTIFICATION OF THE PROPOSED CONDITIONAL USE

1. How is the proposed conditional use (the use in general, independent of its location) in harmony with the purposes, goals, objectives, policies and standards of the Village of Cottage Grove's Comprehensive Plan, the Zoning Ordinance, and any other plan, program, or ordinance adopted, or under consideration pursuant to official notice by the Village?

2. How is the proposed conditional use, in its specific location, in harmony with the purposed, goals, objectives, policies and standards of the Village of Cottage Grove Comprehensive Plan, the Zoning Ordinance, and any other plan, program, or ordinance adopted, or under consideration pursuant to official notice by the Village?

3. Does the proposed conditional use, in its proposed location and as depicted on the required site plan (see 6.3(d), above), result in any substantial or undue adverse impact on nearby property, the character of the neighborhood, environmental factors, traffic factors, parking, public improvements, public property or rights-of-way, or other matters affecting the public health, safety, or general welfare, either as they now exist or as they may in the future be developed as a result of the implementation of the provisions of the Zoning Ordinance, the Comprehensive Plan, or any other plan, program, map ordinance adopted or under consideration pursuant to official notice by the Village or other governmental agency have jurisdiction to guide development?

4. How does the proposed conditional use maintain the desired consistency of land uses, land use intensities, and land use impacts as related to the environs of the subject property?

5. Is the proposed conditional use located in an area that will be adequately served by, and will not impose an undue burden on, any of the improvements, facilities, utilities or services provided by public agencies serving the subject property?

_____

_____

_____

_____

6. Do the potential public benefits of the proposed conditional use outweigh all potential adverse impacts of the proposed conditional use (as identified in Subsections 1. – 5.), after taking into consideration the Applicant's proposal and any requirements recommended by the Applicant to ameliorate such impacts?

_____

_____

_____

_____

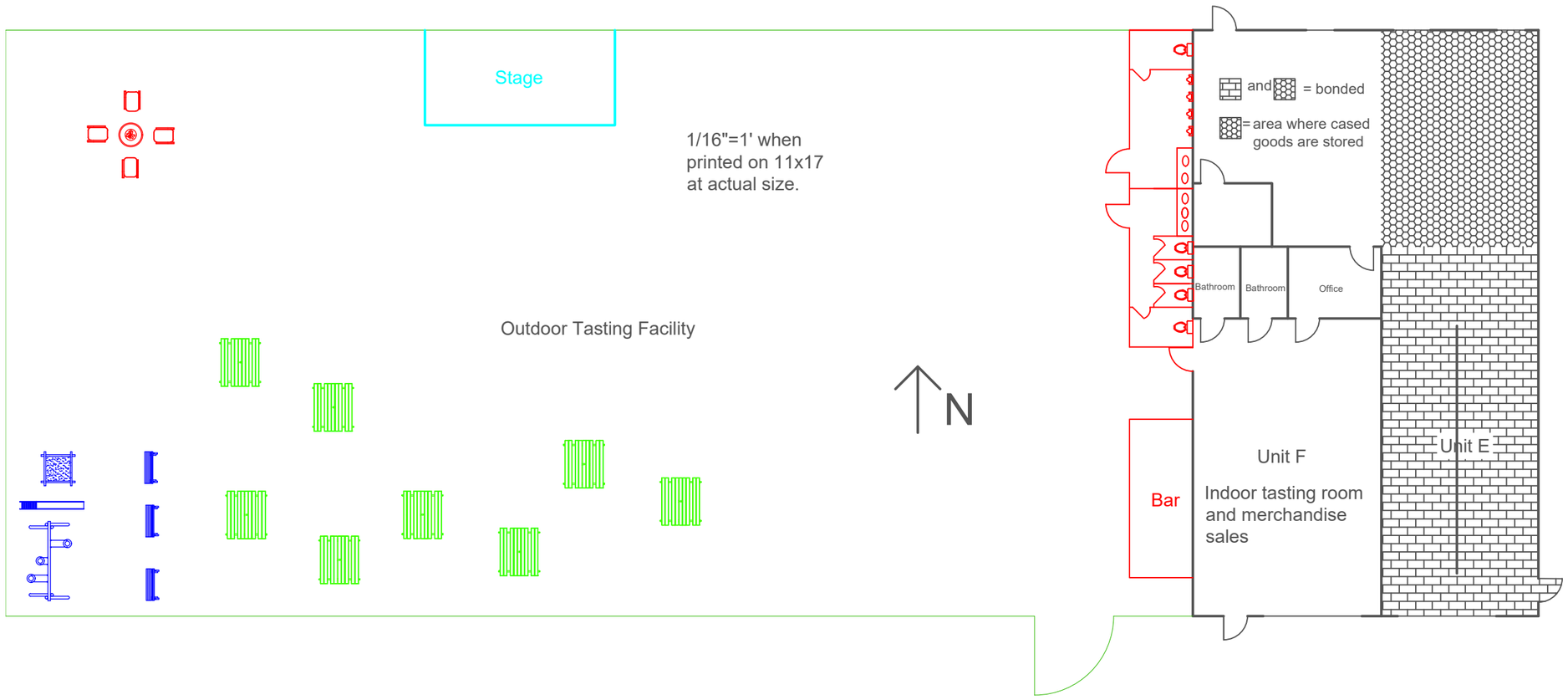
Stage
1/16"=1' when
printed on 11x17
at actual size.
Outdoor Tasting Facility
N
and = bonded
= area where cased
goods are stored
Bathroom
Bathroom
Office
Unit F
Indoor tasting room
and merchandise
sales
Bar
Unit E

Written description of space:

(See attached drawing for reference)

As part of 300 Progress Dr., Unit E, the lease includes a fenced outdoor space totaling ~11,000 sq. ft. directly to the West of the building. This permit is pertaining to remodeling and using that outdoor space for a family-friendly patio / green space for additional patronage and entertainment for Doundrins Distilling.

Background Note: Doundrins Distilling rents both Unit E and Unit F. Production happens in Unit E indoor space, and Unit F is used for a tasting room. Inside Unit F are 2 unisex bathrooms, one of which is ADA.

Entrances/Exits:

The space will be entirely fenced. There will be a door installed going from the Unit F tasting room to the outdoor tasting facility. This will allow patrons and staff to go from indoor to outdoor space easily. There will also be a large gate on the South end of the outdoor fence. This will allow access for vehicles and equipment into the space and may be used for patrons as well.

Security:

The fenced area will be locked at all times when not in use. All building entrances will always be locked when not in use. In addition, the bar and bathroom facilities will be able to be closed up and locked when not in use. The building exterior has permanent flood lights on at night around the perimeter.

Bathrooms:

The intent is to install air-conditioned, permanent bathrooms outside. This will be a fully enclosed building with permanent water supply and electrical. There would be a men's facility and a women's facility, both including ADA access. Shown in the drawing is a men's facility with 4 urinals, 1 stall, and 2 sinks, and a women's facility with 4 stalls and 3 sinks. The ADA stalls in both men's and women's facilities will include a baby changing table. The bathroom building will be locked up when not in use.

Stage:

We will build an outdoor stage with the intent to offer our patrons live music entertainment during regular hours as well as offer the stage as a feature for any customers that might rent the facility out. The drawing shows a 12' x 24' stage. This is our preliminary size estimate based on research on medium-sized band needs. This could change in size. There will be electrical power outlets permanently located at the stage for entertainment to use. The stage will face South so as to ensure ambient noise travels toward a non-residential area.

Outdoor Bar:

Written description of space:

(See attached drawing for reference)

The intent is to install an air-conditioned, permanent service bar outside where patrons can order drinks. This will be a fully enclosed room with permanent water supply and electrical.

Playground Area:

In the Southwest corner of the space is shown a small playground area. This is important to our business to offer a family-friendly environment where parents can bring their children and all members of the family can enjoy themselves.

Food Trucks:

On the South fence we will leave gravel to allow food trucks/carts to drive into the space and serve food to our patrons. The convenience of having the food trucks located inside of the fenced outdoor tasting facility will increase sales for those vendors and help those businesses to grow along with us even more.

Fire Pit:

In the Northwest corner of the space we intend to put a gas fire pit. This would be fueled by an independent propane source, not tied into other gas lines for the building to minimize risks.

General Area:

Throughout the open area, there will be various seating arrangements offered as well as general open spaces for people to bring their own folding chairs to utilize. We intend to keep some green space open for lawn games as well.

Gmail

Abby Abramovich <aabramovich.distillery@gmail.com>

layout drawing

Robert Hogan <rhogan422@gmail.com> Thu, Dec 19, 2019 at 2:16 PM
To: Abby Abramovich <abby@doundrinsdistilling.com>

Hi Abby,

As discuss, we are OK with the proposed plans for the outdoor tasting area with the exception of the fire pit element. We are OK with a fire pit that is fueled by an independent propane source, but this approval is conditional based on approval from our insurance carrier.

Jerry Hogan
[Quoted text hidden]

Written Justification (notes):

1. **Harmony with objectives of Village…**

   Our business model has always been to grow and support the businesses and community around us. Having a large outdoor patio / green space where we can hold entertainment events will only bring more people into the community to grow and support other businesses. These patrons will need food, fuel, shopping, and a place to stay when they come to Cottage Grove for our distillery and our outdoor tasting facility events.

2. **Location in harmony with Village…**

   The location is in a business park. To the North of us between our outdoor tasting area and the closest residential block is a full block of business park businesses and a large wooded area that occupies 2/3 of the area of that city block. To the East of us is more business park for several blocks. To the West of us is a full block of business park buildings and more of the wooded area before reaching any residential areas. To the South of us are more businesses and the railroad tracks. This location is optimal to minimize sound disturbances to any residential areas. In addition we will have the stage facing South to further minimize impact.

3. **Proposed conditional use result in any adverse impact?**

   See response for number 2 above regarding comments on adverse impact.
   In addition, regarding parking: our building has 2 parking lots. The entire parking lot for the South side of the building is for units E & F, both of which we have. We intend to paint lines to

Written Justification (notes):

be able to get a third row of parking in the parking lot as it stands now, with now further expansion required. There will also be the other lot for us to use as overflow parking. In addition, Progress Drive and Bonnie Road have open parking available on both sides of the street.

4. -

5. Will conditional use be adequately served by facilities in area?
See discussion above about parking. Trash and recycling services are paid for privately by tenants and owners of the building. Additional electrical and water should be within capacity of existing building utilities. If further expansion is needed for either, that will be performed by applying for appropriate construction permits through the city and working with utility companies as applicable.

6. -

VILLAGE ACTION REPORT

PROJECT: Glacial Drumlin Middle School Site Plan Amendment
APPLICANT: Jerrud Rossing – Monona Grove School District
PROJECT LOCATION: 801 Damascus Trail
REPORT DATE: January 13, 2020

PROJECT DESCRIPTION: The applicant is seeking approval of a site plan amendment to allow the construction of an addition to the school cafeteria. The exterior is proposed to consist of brick and glazing to match the existing building.

PLAN COMMISSION MEETING: January 8, 2020

STAFF REPORT PROVIDED BY: _X_ Planner, ___ Engineer, ___ Public Works

MOTION: by Williams (1st), Schulze (2nd)

The site plan was APPROVED.

VOTE: _4_ Aye, _0_ Nay, _1_ Abstain

APPLICANT COMMENTS:

- (Maclain Schramm – Eppstein Uhen Architects) – provided an overview of the site plan and floor plan. Emphasis of design was to move students through the serving area more quickly and to create a more functional seating area.

PLAN COMMISSION COMMENTS:

- (Ratcliff) – does this allow more kids to eat? Schramm replied that the expansion increases capacity of the cafeteria, but it does not add capacity to the school.
- (Ratcliff) – is it big enough? Schramm replied yes.
- (Williams) – could they have used some of the adjacent common space? Schramm replied that option was analyzed, but it was not enough space to accommodate needs. Goal was to make seating arrangement more flexible.
- (Jushchyshyn) – where is the budget coming from? Schramm replied it was part of the approved referendum and improving functionality of the cafeteria was always a priority. Jushchyshyn believed the school district should have sought public input on the project and asked if the Village could require a public hearing. Ruth replied no, a public hearing is not part of a site plan review per ordinance.

PUBLIC COMMENTS:

- None

STAFF COMMENTS:

- See planning staff report.

PLANNING STAFF REPORT

MEMO DATE: December 17, 2019
MTG. DATE: **JANUARY 8, 2020**

TO: Village of Cottage Grove Plan Commission

CC: Matt Giese – Village Administrator
Lisa Kalata – Village Clerk
Lee Boushea – Village Attorney
James Bongard – Village Engineer

FROM: Erin Ruth, AICP – Village Planning Director

RE: **Monona Grove School District – Glacial Drumlin Cafeteria Addition**

BACKGROUND

Property Owner:	Monona Grove School District
Location:	801 Damascus Trail
Area:	36.7 acres
Agent:	Jerrud Rossing – MGSD Maclain Schramm – Eppstein Uhen Architects
Existing Zoning:	SR-4, Single-Family Residential
Proposed Zoning:	SR-4, Single-Family Residential

OVERVIEW

The applicant, the Monona Grove School District, is seeking approval of a site plan amendment to allow the construction of an approximately 1,500 sq. ft. addition to the school's cafeteria.

The addition will not increase enrollment or affect capacity, but it is intended to reduce the number of lunch periods by accommodating more students at a given lunch period. The exterior is proposed to consist of brick and glazing to match the existing building.

LOCATION MAP

COMPREHENSIVE PLAN CONSISTENCY

The subject area is designated as a Community Facility on the Comprehensive Plan's Future Land Use map. An institutional use such as the proposed elementary school is permitted in those districts.

Land Use

Specific polices can be found under the 'Community Facilities' section of the Comprehensive Plan's Land Use Chapter. Policies relevant to the proposed school are as follows:

- *Community Facility uses such as schools, churches, and civic buildings should be allowed as conditional uses in all zoning districts.*

  A conditional use permit was granted at the time of the initial school approval. The cafeteria addition complies with that permit and does not require amendment.

- *Continue to work with the Monona Grove School District to coordinate uses and activities on district owned land. Existing community facility uses should work with the neighborhood to discuss potential long-term expansion plans and how these plans would impact the area. Pre-identified Community Facility expansion areas should be delineated by institutions whenever possible to minimize the potential for future land use conflicts.*

  No additional expansion are planned at this facility.

- *The proposed use should not have a negative effect on existing traffic flows and volumes in the surrounding neighborhood. The existing street system must be adequate to meet increased traffic associated with the project.*

  The proposed project does not affect enrollment or capacity and therefore will not increase traffic.

- *As a general rule, Community Facility uses should not generate on-street parking in residential neighborhoods. All parking needs for Community Facility uses should be met on-site.*

  The proposed project does not affect enrollment or capacity and therefore will not increase parking.

ZONING ORDINANCE CONSISTENCY

The proposed elementary school is an 'indoor institutional' land use per the Zoning Ordinance. That use is permitted as a conditional use in the SR-4, Single Family Residential district. There is a conditional use permit in place for the school that is not affected by the proposed cafeteria addition.

Per 325-38(A)(2)(b)(2), an indoor institutional use is permitted as a conditional use in the SR-4 district. The proposed project meets the all regulations applicable to non-residential uses per 325-38(A)(7)(a) and (b).

Per 325-49(C)(3), a school is defined as an indoor institutional land use. Regulations related to an indoor institutional land use that are relevant to this project are as follows:

- *All structures shall be located a minimum of 50' from any residentially zoned property.*

  The proposed school addition is more than 50' from all property lines.

The proposed project is subject to the landscaping requirements in Article V of the Zoning Ordinance. The addition does not trigger additional landscaping requirements.

The proposed project meets the requirements of 325-90 which regulates exterior building materials. The architecture is attractive and the proposed materials are high quality.

STAFF RECOMMENDATION

Staff recommends **APPROVAL** of the proposed site plan amendment.

VILLAGE OF COTTAGE GROVE
REQUEST TO AMEND AN APPROVED SITE PLAN

In accordance with Ordinance 325-112(F) "any and all variations between development and/or land use activity on the subject property and the approved site plan is a violation of this chapter. An approved site plan shall be revised and approved via the procedure of Section 325-112(B) and (C), so as to clearly and completely depict any and all proposed modifications to the previously approved site plan, prior to the initiation of said modifications."

APPLICANT: Monona Grove School District

APPLICANT ADDRESS: GLACIAL DRUMLIN MIDDLE SCHOOL

TELEPHONE: 608-316-1916

EMAIL ADDRESS: jerrud.rossing@mgschools.net

PROJECT LOCATION:

801 Damascus Trail, Cottage Grove, WI 53527

PROPOSED SITE PLAN MODIFICATION IS:

CAFETERIA ADDITION

APPLICATION SUBMITTAL REQUIREMENTS:

1. Submittal requirements per 325-112(C), see following pages.
2. Fee of $200.
3. Escrow deposit of $500 for consultant review. If actual review fees are less, excess will be returned. If actual review fees exceed escrow amount, applicant will be billed for the excess.

12/2/19
Date

Applicant Signature

For office use only:

Date Received:
Planning Commission Meeting Date:
Village Board Meeting Date:

SUBMITTAL REQUIREMENTS PER 325-112(C):

Required items that are deemed to be not applicable to the proposed project may be waived by the Zoning Administrator. Detailed site analysis per 325-112(C)(8) may be required; verify with Village staff. Submittal materials may be submitted as pdf files via email in lieu of printed copies by arrangement with the Village Planning Director.

(1) Written description of the intended use describing in reasonable detail the:

(a) Existing zoning district(s)~~ [and proposed zoning district(s) if different].~~

(b) Land use plan map designation(s).

~~(c) Description of existing environmental features.~~

(d) Current land uses present on the subject property.

(e) Proposed land uses for the subject property.

~~(f) Projected number of residents, employees and daily customers.~~

(g) ~~Proposed amount of dwelling units~~, floor area, impervious surface area and landscape surface area and resulting site density, floor area ratio, impervious surface area ratio and landscape surface area ratio.

(h) Operational considerations relating to hours of operation, projected normal and peak water usage, sanitary sewer or septic loadings~~ and traffic generation.~~

~~(i) Operational considerations relating to potential nuisance creation pertaining to noncompliance with the performance standards addressed in Article VI, including street access, traffic visibility, parking, loading, exterior storage, exterior lighting, vibration, noise, air pollution, odor, electromagnetic radiation, glare and heat, fire and explosion, toxic or noxious materials, waste materials, drainage and hazardous materials. If no such nuisances will be created (as indicated by complete and continuous compliance with the provisions of Article VI), then~~ the statement "The proposed development shall comply with all requirements of Article VI" shall be provided.

(j) Exterior building~~ and fencing materials.~~

(k)~~ Possible future expansion and related implications for § 325-112C(1)(a) through (j) above.~~

(l) Any other information pertinent to adequate understanding by the Plan Commission of the intended use and its relation to nearby properties.

(2) A small location map scalable at 11 inches by 17 inches showing the subject property, all properties within 300 feet and illustrating its relationship to the nearest street

intersection. (A photocopy of the pertinent section of the Village's Official Zoning Map with the subject property clearly indicated shall suffice to meet this requirement.)

(3) A property site plan drawing (and reduction scalable at 11 inches by 17 inches) which includes:

(a) A title block which indicates the name, address and phone number(s) of the current property owner and/or agent(s) (developer, architect, engineer, planner) for the project.

(b) The date of the original plan and the latest date of revision to the plan.

(c) A North arrow and a graphic scale. Said scale shall not be smaller than one inch equals 100 feet.

~~(d) A legal description of the subject property.~~

(e) All property lines and existing and proposed right-of-way lines with bearings and dimensions clearly labeled.

(f) All existing and proposed easement lines and dimensions with a key provided and explained on the margins of the plan as to ownership and purpose.

(g) All required building setback lines.

(h) All existing and proposed buildings, structures and paved areas, including building entrances, walks, drives, decks, patios, fences, walls and utility and drainage systems, connections and fixtures.

~~(i) The location and dimension (cross section and entry throat) of all access points onto public streets.~~

~~(j) The location and dimension of all on-site parking (and off-site parking provisions if they are to be employed), including a summary of the number of parking stalls provided versus required by this chapter.~~

~~(k) The location and dimension of all loading and service areas on the subject property and labels indicating the dimension of such areas.~~

~~(l) The location of all outdoor storage areas and the design of all screening devices.~~

~~(m) The location, type, height, size and lighting of all signage on the subject property.~~

~~(n) The location, height, design/type, illumination power and orientation of all exterior lighting on the subject property, including the clear demonstration of~~

~~compliance with a limit of 1.0 footcandles at nonresidential property lines and 0.5 footcandles at residential property lines.~~

~~(o) The location and type of any permanently protected green space areas.~~

(p) The location of existing and proposed drainage facilities. - ONLY IF CHANGING

(q) In the legend, data for the subject property:

[1] Lot area;

[2] Floor area;

[3] Floor area ratio (b/a);

[4] Impervious surface area;

[5] Impervious surface ratio (d/a); and

[6] Building height.

(4) A detailed landscaping plan of the subject property, at the same scale as the main plan (and reduction scalable at 11 inches by 17 inches), showing the location of all required bufferyard and landscaping areas and existing and proposed landscape point fencing and berm options for meeting said requirements. The landscaping plan shall demonstrate complete compliance with the requirements of Village landscaping requirements. (NOTE: the individual plant locations and species, fencing types and heights and berm heights need to be provided.) ONLY IF CHANGING

(5) A grading and erosion control plan at the same scale as the main plan (and reduction scalable at 11 inches by 17 inches) showing existing and proposed grades, including retention walls and related devices, and erosion control measures per Wisconsin Administrative Code, COMM Chapter 21, Uniform Dwelling Code, and Chapter 65, Commercial Construction. - ONLY IF CHANGING

(6) Elevation drawings of proposed buildings or proposed remodeling of existing buildings showing finished exterior treatment shall also be submitted, with adequate labels provided to clearly depict exterior materials, texture, color and overall appearance. Perspective renderings of the proposed project and/or photos of similar structures may be submitted, but not in lieu of adequate drawings showing the actual intended appearance of the buildings. - ONLY FOR NEW ADDITION

~~(7) A certified survey may be required by the Zoning Administrator in instances where he determines compliance with setback requirements may be difficult. The survey shall be prepared by a registered land surveyor and shall depict property lines and proposed buildings, structures and paved areas.~~

Monona Grove School District – Proposed Addition to Glacial Drumlin School

Village of Cottage Grove Plan Commission Submittal

Written Description

December 4, 2019

The Monona Grove School District proposes to construct an addition to the existing cafeteria space. The addition is not intended to add capacity to the school but rather reduce the number of lunch periods for the students by increasing space in the cafeteria and increasing the number of food serving lines. The area proposed for the addition is currently paved with asphalt.

The property is currently zoned SR-4 (Single Family Residential). The current property is being utilized for educational purposes by Glacial Drumlin School.

The school hours are currently from 8:00AM until 3:20PM.

The proposed exterior building materials for the addition will match the existing building material which consist of brick, and glass.

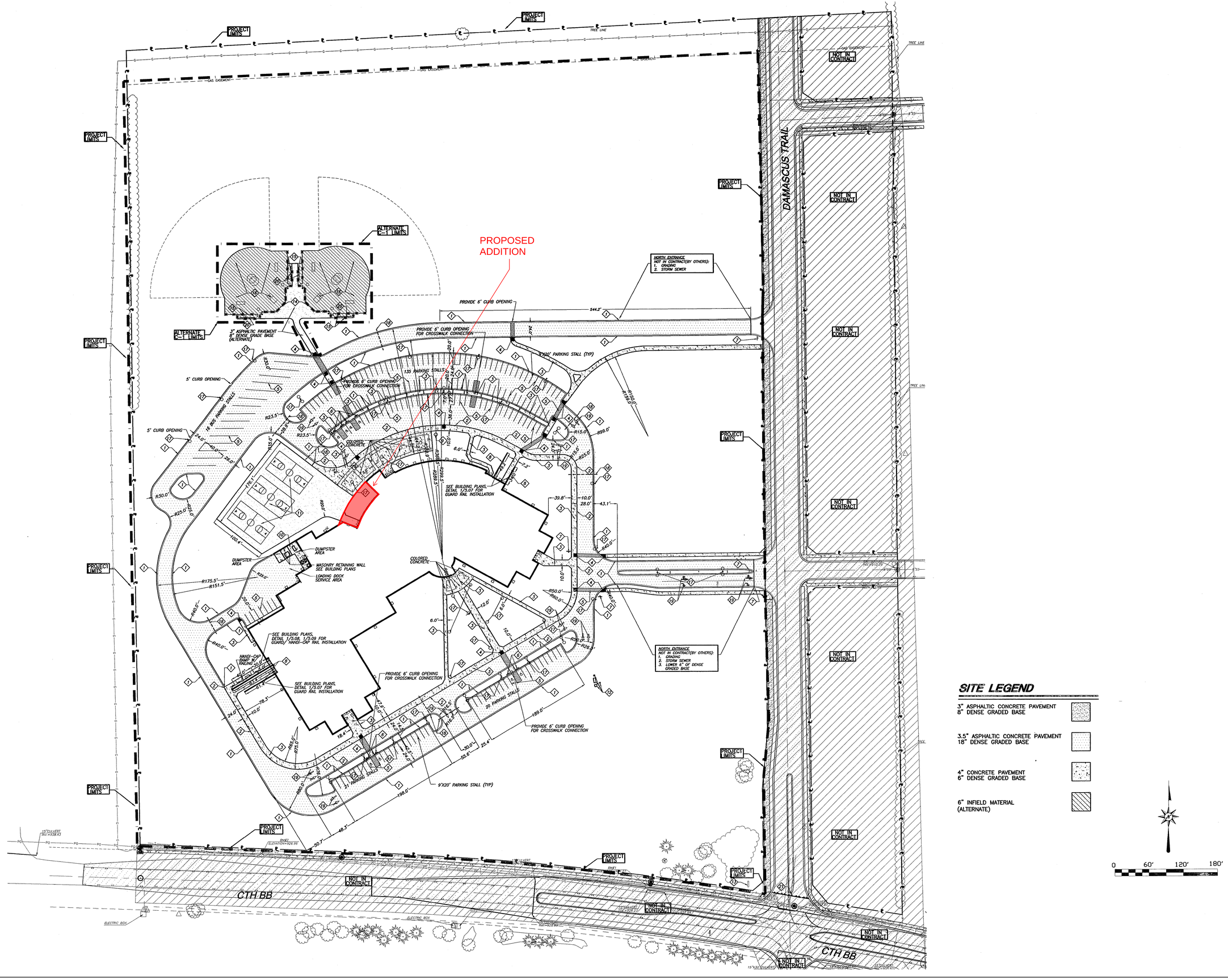

SITE LEGEND

- 3" ASPHALTIC CONCRETE PAVEMENT 8" DENSE GRADED BASE
- 3.5" ASPHALTIC CONCRETE PAVEMENT 18" DENSE GRADED BASE
- 4" CONCRETE PAVEMENT 6" DENSE GRADED BASE
- 6" INFIELD MATERIAL (ALTERNATE)

Site Plan

KEYNOTES PER SHEET

0966-03	PATCH AND REPAIR CRACKED COVE BASE TO MATCH EXISTING.

AREA OF WORK

AREA INCLUDED IN SCOPE

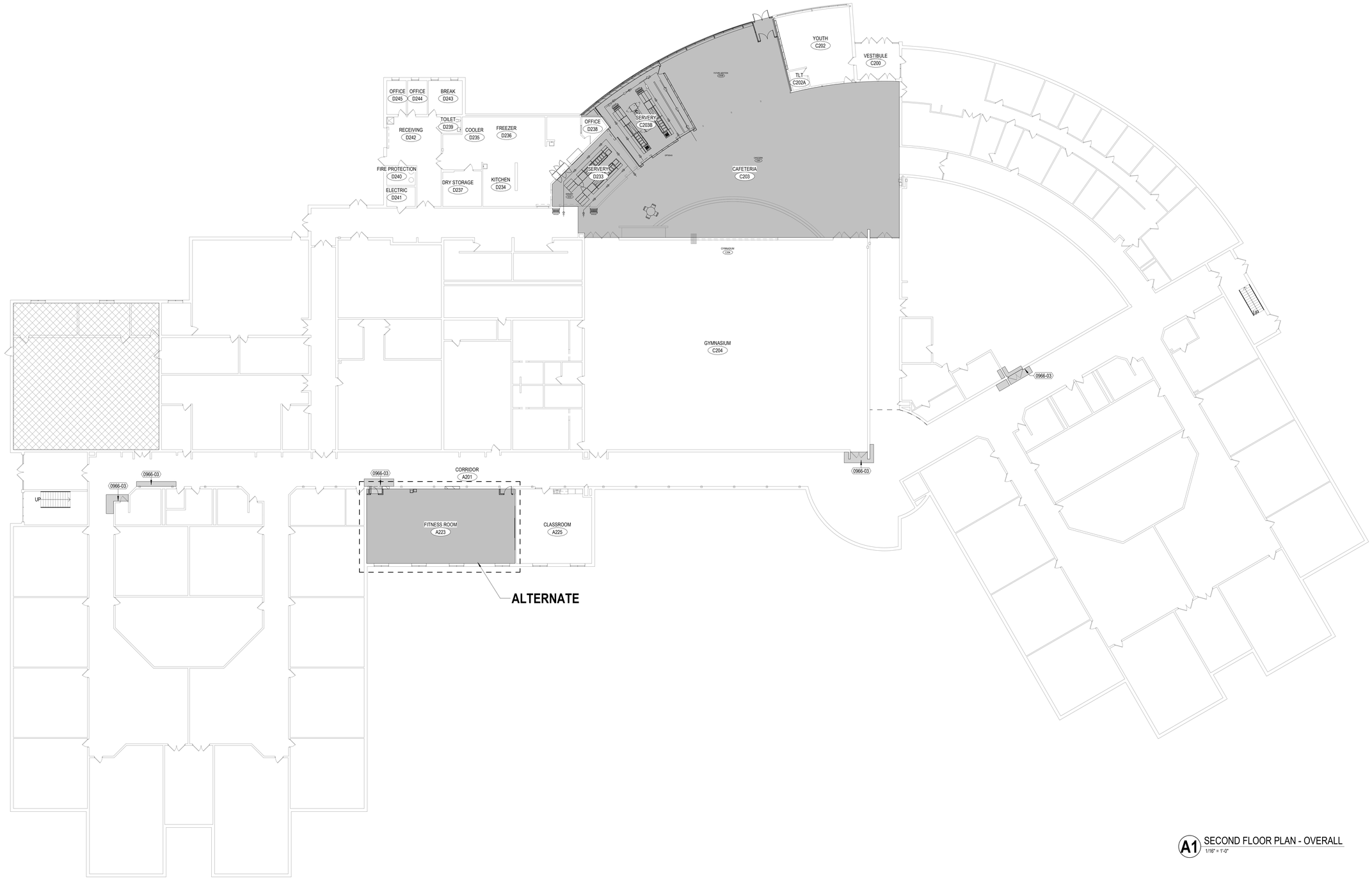

A1 SECOND FLOOR PLAN - OVERALL
1/16" = 1'-0"

eua

milwaukee	333 East Chicago Street Milwaukee, Wisconsin 53202 414.271.5350
madison	309 West Johnson Street, Suite 202 Madison, Wisconsin 53703 608.442.5350
des moines	699 Walnut Street, Suite 400 Des Moines, Iowa 50309 515.724.5840
denver	1899 Wynkoop Street, Suite 300 Denver, Colorado 80202 303.595.4500

PROJECT INFORMATION

GLACIAL DRUMLIN MIDDLE SCHOOL

801 DAMASCUS TRAIL
COTTAGE GROVE WI 53527

ISSUANCE AND REVISIONS

DATE	DESCRIPTION
04/18/2019	SCHEMATIC DESIGN SET
06/19/2019	DESIGN DEVELOPMENT PROGRESS SET
08/16/2019	50% CONSTRUCTION DOCUMENT SET
09/27/2019	CONSTRUCTION DOCUMENTS

KEY PLAN

N
PLAN

N
TRUE

SHEET INFORMATION

PROJECT MANAGER	RV
PROJECT NUMBER	317300

SECOND FLOOR PLAN - OVERALL

A102

© Eppstein Uhen Architects, Inc.

KEYNOTES PER SHEET

0101	ALIGN FINISHES
0104	ALIGN FINISHED FACE OF NEW WALL TO ADJACENT EXISTING SURFACE

SHEET NOTES - FLOOR PLAN

1. BEFORE BEGINNING WORK, INVESTIGATE AND VERIFY THE EXISTENCE AND LOCATION OF MECHANICAL AND ELECTRICAL SYSTEMS AND OTHER CONSTRUCTION AFFECTING THE WORK. IF DISCREPANCIES ARE DISCOVERED, NOTIFY ARCHITECT PROMPTLY.
2. PROVIDE REQUIRED UTILITY SERVICES TO EQUIPMENT, FURNISHINGS AND APPLIANCES. COORDINATE REQUIREMENTS WITH OWNER.
4. DIMENSIONS ON FLOOR PLANS ARE TO FINISH FACE OF WALLS UNLESS NOTED OTHERWISE.
5. VERIFY STRUCTURAL ELEMENTS INCLUDING BUT NOT LIMITED TO POST TENSION CABLES OR OTHER REINFORCEMENT EMBEDDED IN FLOOR SLABS PRIOR TO CORING OR CUTTING. COORDINATE VERIFICATION METHOD WITH OWNER.
6. PROVIDE ALL FINISH SAMPLES TO ARCHITECT FOR REVIEW AND APPROVAL PRIOR TO INSTALLATION INCLUDING BUT NOT LIMITED TO CARPET, WALL COVERINGS, PAINT DRAW-DOWNS, VINYL BASE.
7. ALL WALLS SHALL BE WALL TYPE S3A-S11 UNLESS NOTED OTHERWISE. SEE WALL TYPES ON SHEET A010.
8. PROVIDE MOISTURE RESISTANT AND MOLD RESISTANT TYPE GYPSUM BOARD AT PLUMBING FIXTURE WALLS.
9. LOCATE ALL DOOR JAMBS 4 INCHES FROM ADJACENT PERPENDICULAR WALL UNLESS NOTED OTHERWISE.
10. PROVIDE BLOCKING AND FRAMING AS INDICATED AND AS REQUIRED TO SUPPORT FACING MATERIALS, FIXTURES, SPECIALTY ITEMS, MILLWORK AND TRIM.
11. PROVIDE 3/4 INCHES FIRE-RETARDANT TREATED PLYWOOD AS BACKING PANELS FOR TELEPHONE & ELECTRICAL EQUIPMENT. INSTALL AT 1'-0" AFF TO FINISHED CEILING. PAINT PLYWOOD TO MATCH ADJACENT WALL FINISH. COORDINATE FINAL SIZE AND LOCATION WITH OWNER.
12. PATCH AND REPAIR FLOOR IN PREPARATION FOR NEW FLOORING WHERE WALLS HAVE BEEN REMOVED.
13. PATCH AND REPAIR CEILING GRID SYSTEM WHERE WALLS AND PARTITIONS HAVE BEEN REMOVED.
14. PATCH AND REPAIR WALL WHERE PORTION OF WALL HAVE BEEN REMOVED TO COMPLETE NEW CONSTRUCTION.
15. SEE ROOM FINISH MATERIAL SCHEDULE/PLANS FOR EXTENT OF NEW WALL FINISHES, INCLUDING BUT NOT LIMITED TO WALLCOVERING, WALL TILE, PAINT, PANELING, WALL PROTECTION, CORNER GUARDS AND/OR BASE. PROPER WALL PREP INCLUDING BUT NOT LIMITED TO REMOVING EXISTING WALL FINISHES AND ADHESIVE RESIDUE, PATCHING SUBSTRATES, PRIMING AND LEVELING SHALL BE INCLUDED IN BASE BID AND NOT CONSIDERED AN EXTRA CHARGE.
16. ALL AREAS DISTURBED BY DEMOLITION SHALL BE PATCHED AND PROPERLY PREPARED FOR NEW FINISH APPLICATIONS. WHERE ADJACENT FINISHES ARE EXISTING TO REMAIN, PATCH AND MATCH EXISTING FINISHES. CONSULT WITH THE OWNER TO IDENTIFY ATTIC STOCK AND/OR PREVIOUS MATERIAL SPECIFICATIONS.
17. SEE ROOM FINISH MATERIAL SCHEDULE/PLANS FOR EXTENT OF NEW FLOORING MATERIAL. PROPER FLOOR PREP INCLUDING BUT NOT LIMITED TO TEAR OUT, CLEANING, PATCHING, AND LEVELING SHALL BE INCLUDED IN BASE BID AND NOT CONSIDERED AN EXTRA CHARGE.
18. TOOTH IN CMU AND MASONRY TO MATCH ADJACENT EXISTING CONSTRUCTION AND JOINT PATTERN AT NEW OPENINGS, OPENINGS TO BE FILLED IN, AND AREAS TO BE PATCHED.
19. USE CMU BOND BEAM LINTEL AT NEW CMU OPENINGS UNLESS NOTED OTHERWISE ON STRUTUAL DRAWINGS. SEE STRUCTURAL FOR ADDITIONAL LINTEL INFORMATION.
20. PATCH AND REPAIR FLOOR, WALL AND ROOF ASSEMBLIES WHERE MECHANICAL, PUMBLING AND ELECTRICAL ITEMS HAVE BEEN REMOVED AND NOT REPLACED WITH NEW WORK.

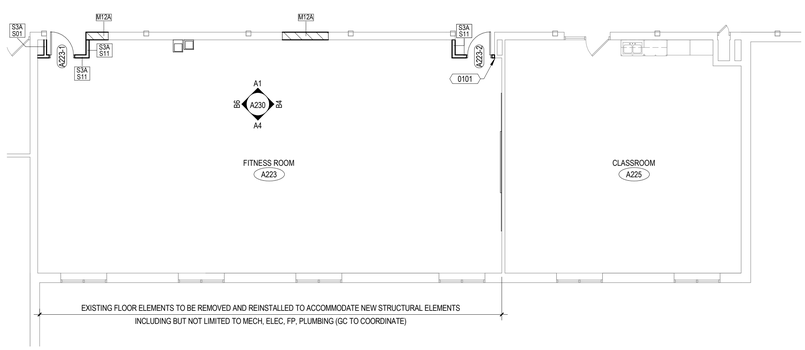

A1 SECOND FLOOR PLAN - AREA A (ADD ALTERNATE BID)
1/8" = 1'-0"

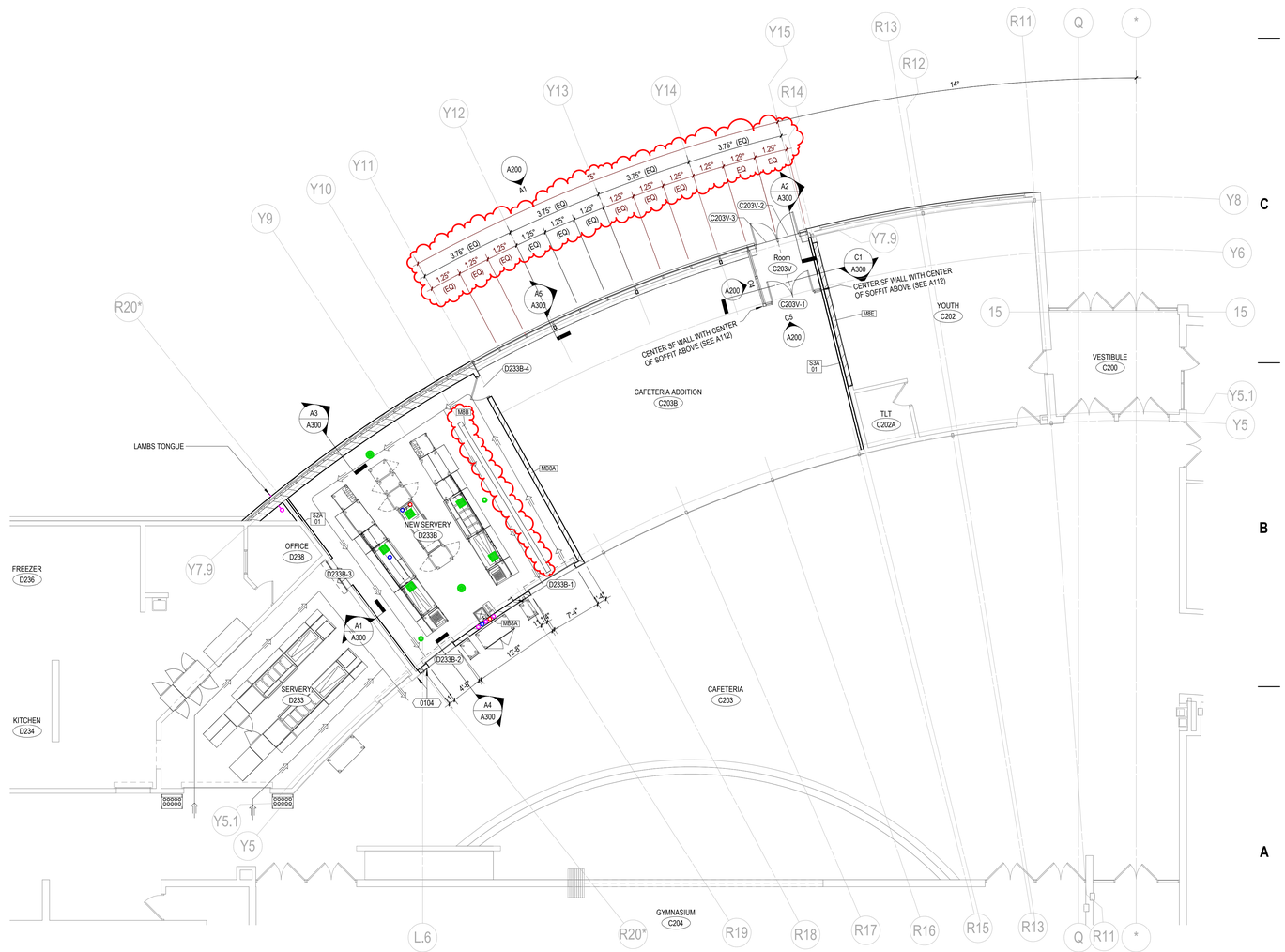

A3 SECOND FLOOR PLAN - AREA B
1/8" = 1'-0"

milwaukee 333 East Chicago Street Milwaukee, Wisconsin 53202 414.271.5350

madison 309 West Johnson Street, Suite 202 Madison, Wisconsin 53703 608.442.5350

des moines 699 Walnut Street, Suite 400 Des Moines, Iowa 50309 515.724.5840

denver 1899 Wynkoop Street, Suite 300 Denver, Colorado 80202 303.595.4500

PROJECT INFORMATION

GLACIAL DRUMLIN MIDDLE SCHOOL

801 DAMASCUS TRAIL
COTTAGE GROVE WI 53527

ISSUANCE AND REVISIONS

DATE	DESCRIPTION
04/19/2019	SCHEMATIC DESIGN SET
06/19/2019	DESIGN DEVELOPMENT PROGRESS SET
08/16/2019	50% CONSTRUCTION DOCUMENT SET
09/27/2019	CONSTRUCTION DOCUMENTS
10/11/2019	ADDENDUM 01

KEY PLAN

PLAN TRUE

SHEET INFORMATION

PROJECT MANAGER	RV
PROJECT NUMBER	317300

SECOND FLOOR PLANS - AREA A,B

A102AB

© Eppstein Uhen Architects, Inc.

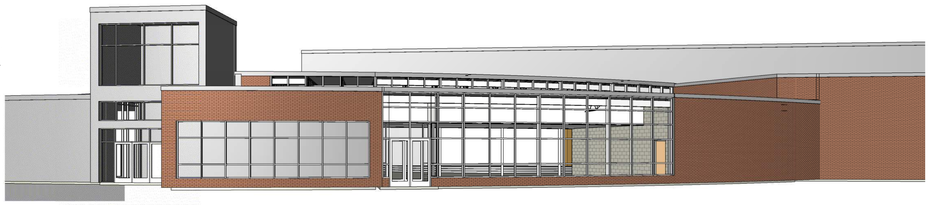

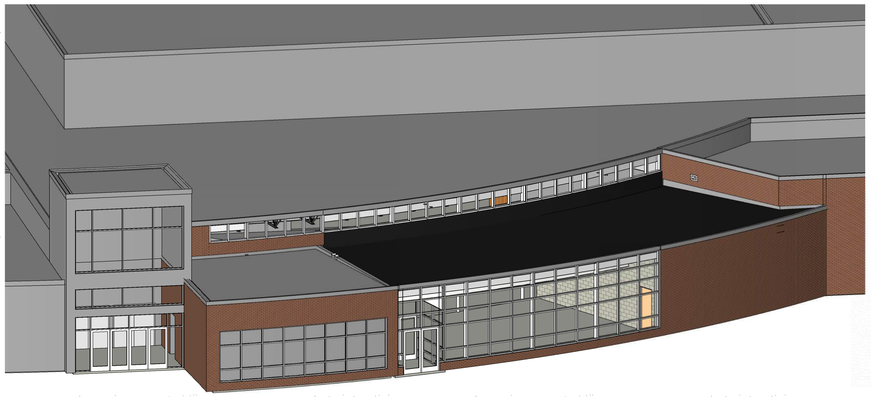

ALUMINUM STOREFRONT NOTES

GENERAL NOTES

1. ALL OPENING DIMENSIONS TO BE FIELD VERIFIED. DIMENSIONS ARE SHOWN FOR INFORMATION ONLY AND MUST BE CONFIRMED PRIOR TO WINDOW FABRICATION.
2. SEE DOOR AND FRAME SCHEDULE SHEETS A600, FOR DOOR FRAME SIZES

FRAME NOTES

EX XX — **EX** INDICATES KAWNEER 601T FOR BASIS OF DESIGN - EXTERIOR FRONT GLAZED STOREFRONT SYSTEM WITH 2" x 6" MULLIONS. UNLESS NOTED OTHERWISE.

IN XX — **IN** INDICATES KAWNEER 450 FOR BASIS OF DESIGN - INTERIOR CENTER-GLAZED STOREFRONT SYSTEM WITH 1.75" x 4.5" MULLIONS. UNLESS NOTED OTHERWISE.

GLAZING NOTES

1. ALL EXTERIOR STOREFRONT GLAZING TO BE IG-2T UNLESS OTHERWISE NOTED.
2. ALL INTERIOR STOREFRONT GLAZING TO BE S-1T UNLESS OTHER WISE NOTED.

GLASS TYPES

EXTERIOR
IG-2A: INSULATED CLEAR
IG-2T: INSULATED GLAZING, TEMPERED
IG-3A: INSULATED GLAZING, TEMPERED, LAMINATED

INTERIOR
S-1A: VISION GLAZING
S-1T: SAFETY GLAZING
S-2TL: LAMINATED GLAZING

REFER TO SPECIFICATIONS FOR GLASS TYPE DESIGNATIONS

KEYNOTES PER SHEET

0108	ALIGN
0120	ALIGN TOP OF MULLION

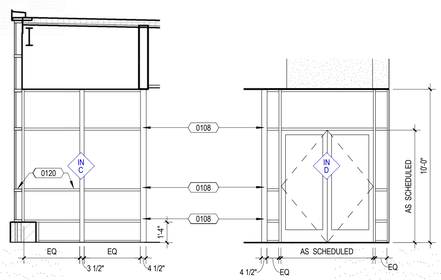

C4 WEST VESTIBULE ELEVATION
1/4" = 1'-0"

C5 SOUTH VESTIBULE ELEVATION
1/4" = 1'-0"

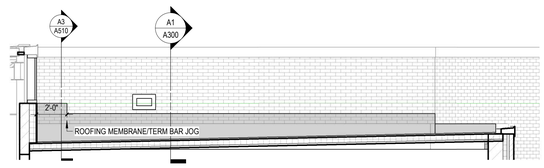

C6 BRICK AT ROOF ELEVATION
1/4" = 1'-0"

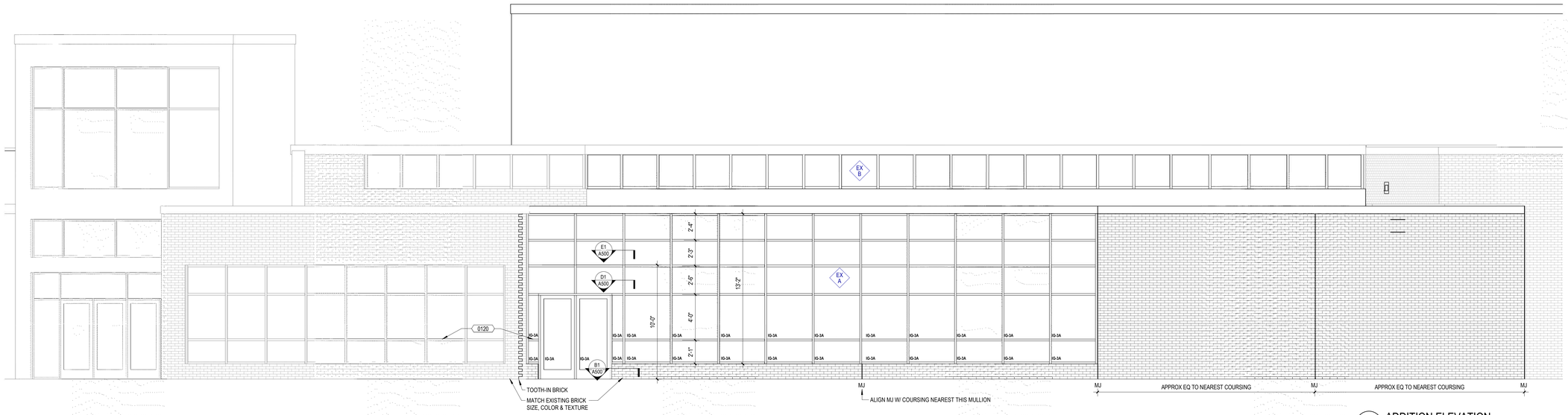

A1 ADDITION ELEVATION
1/4" = 1'-0"

eua

milwaukee	333 East Chicago Street Milwaukee, Wisconsin 53202 414.271.5350
madison	309 West Johnson Street, Suite 202 Madison, Wisconsin 53703 608.442.5350
des moines	699 Walnut Street, Suite 400 Des Moines, Iowa 50309 515.724.5840
denver	1899 Wynkoop Street, Suite 300 Denver, Colorado 80202 303.595.4500

PROJECT INFORMATION

GLACIAL DRUMLIN MIDDLE SCHOOL

801 DAMASCUS TRAIL
COTTAGE GROVE WI 53527

ISSUANCE AND REVISIONS

DATE	DESCRIPTION
06/19/2019	DESIGN DEVELOPMENT PROGRESS SET
08/16/2019	50% CONSTRUCTION DOCUMENT SET
09/27/2019	CONSTRUCTION DOCUMENTS
10/11/2019	ADDENDUM 01

KEY PLAN

SHEET INFORMATION

PROJECT MANAGER	RV
PROJECT NUMBER	317300

EXTERIOR & FRAME TYPE ELEVATIONS & AXONS

A200

© Eppstein Uhen Architects, Inc.

Existing Exterior Perspective

New Exterior Perspective

VILLAGE ACTION REPORT

PROJECT: Bakken Park Site Plan

APPLICANT: Sean Brusegar – Village of Cottage Grove Director of Parks & Recreation
PROJECT LOCATION: Bakken Park
REPORT DATE: January 13, 2020

PROJECT DESCRIPTION: The Village of Cottage Grove's Department of Parks & Recreation is applying for a site plan amendment for Bakken Park to permit the construction of a new shelter, a splash pad, and associate improvements. The shelter features 1,150 sq. ft. of enclosed space and 1,900 sq. ft. of open area under the canopy.

PLAN COMMISSION MEETING: January 8, 2020

STAFF REPORT PROVIDED BY: _X_ Planner, ___ Engineer, ___ Public Works

MOTION: by Broom (1st), Schulze (2nd)

The site plan was APPROVED without conditions.

VOTE: _5_ Aye, _0_ Nay, _0_ Abstain

APPLICANT COMMENTS:

- (Dan Schmitt - MSA) – provided an overview of the site plan and shelter design.

PLAN COMMISSION COMMENTS:

- (Williams) – Is the grill a good idea at this location? Schmitt noted it is placed away from the playground. It could be moved elsewhere if the Village decides they don't want it there.
- (Jushchyshyn) – are there any solar components? Schmitt replied no, due to cost. Ratcliff asked if solar could be added later. Schmitt replied that they probably could.
- (Jushchyshyn) – does the splashpad run continuously? Schmitt replied no, the user pushes a button and it runs for 4 minutes.
- (Ratcliff) – asked about roofing material on the shelter. Schmitt replied it's a shingle system with a 50-year life that was less expensive than a metal roof.
- (Williams) – will there be security cameras? Brusegar replied that there will be cameras, and they are working with TDS on internet for the system.
- (Ratcliff) – will the splash pad be lit after hours? Schmitt replied there would be security lighting only.

PUBLIC COMMENTS:

- None

STAFF COMMENTS:

- See planning staff report.

PLANNING STAFF REPORT

MEMO DATE: December 2, 2019
MTG. DATE: **DECEMBER 11, 2019**

TO: Village of Cottage Grove Plan Commission

CC: Village of Cottage Grove Board of Trustees
Matt Giese – Village Administrator
Lisa Kalata – Village Clerk
Lee Boushea – Village Attorney
Michael Maloney – Village Engineer

FROM: Erin Ruth, AICP – Village Planning Director

RE: **Bakken Park Site Plan Amendment – Shelter and Splash Pad**

BACKGROUND

Property Owner:	Village of Cottage Grove
Location:	Bakken Park
Area:	28.6 acres
Agent:	Sean Brusegar – Director of Parks & Rec., V. of Cottage Grove Dan Schmitt – Landscape Architect, MSA
Existing Zoning:	Park & Open Space
Proposed Zoning:	Park & Open Space
Future Land Use Plan:	Park & Open Space

OVERVIEW

The Village of Cottage Grove's Department of Parks & Recreation is applying for a site plan amendment for Bakken Park to permit the construction of a new shelter, a splash pad, and associate improvements. The shelter features 1,150 sq. ft. of enclosed space and 1,900 sq. ft. of open area under the canopy.

The other improvements include bike racks, bike 'fix-it' equipment, ADA ramps from the existing parking lot, additional site lighting, and modifications to the path through the subject area.

Funding for the construction of the shelter and splash pad was included in the Village's 2020 budget, with construction expected to begin in the spring.

LOCATION MAP

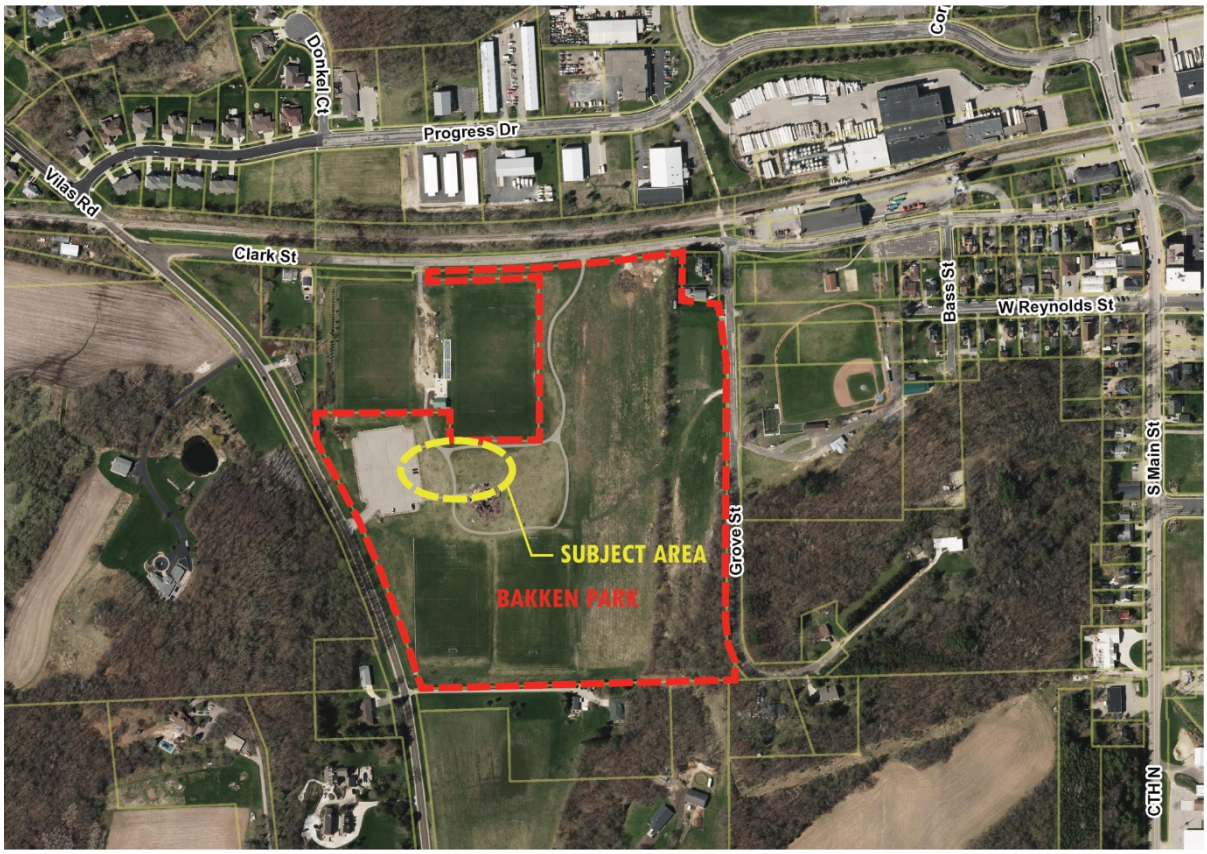

COMPREHENSIVE PLAN CONSISTENCY

The property is designated as Park and Open Space on the Future Land Use Map. The proposed site plan amendment is consistent with that designation. Furthermore, the proposed improvements are included in the current Park and Open Space Plan, amended in 2018.

ZONING ORDINANCE CONSISTENCY

The Bakken Park parcel is zoned Park and Open Space, as regulated by 325-42 of the zoning ordinance.

Per 325-42(2)(a), both active and passive outdoor public recreation are permitted by right within the district.

The proposed project meets all intensity and bulk requirements of the district.

STAFF RECOMMENDATIONS

Staff recommends that the proposed Site Plan be **APPROVED.**

VILLAGE OF COTTAGE GROVE
REQUEST TO AMEND AN APPROVED SITE PLAN

In accordance with Ordinance 325-112(F) "any and all variations between development and/or land use activity on the subject property and the approved site plan is a violation of this chapter. An approved site plan shall be revised and approved via the procedure of Section 325-112(B) and (C), so as to clearly and completely depict any and all proposed modifications to the previously approved site plan, prior to the initiation of said modifications."

APPLICANT: Village of Cottage Grove

APPLICANT ADDRESS:
210 Progress Drive, Suite 2
Cottage Grove, WI 53527

TELEPHONE: (608) 839 - 8968

EMAIL ADDRESS: sbrusegar@village.cottage-grove.wi.us

PROJECT LOCATION: Phoebe Bakken Memorial Park
220 Grove St, Cottage Grove, WI 53527

PROPOSED SITE PLAN MODIFICATION IS:
Addition of a three-season restroom and shelter and a recirculating splash pad for the Village of Cottage Grove.

APPLICATION SUBMITTAL REQUIREMENTS:

1. Submittal requirements per 325-112(C), see following pages.
2. Fee of $200.
3. Escrow deposit of $500 for consultant review. If actual review fees are less, excess will be returned. If actual review fees exceed escrow amount, applicant will be billed for the excess.

11/26/2019
Date

Applicant Signature
(MSA on behalf of the Village of Cottage Grove)

For office use only:

Date Received:
Planning Commission Meeting Date:
Village Board Meeting Date:

SUBMITTAL REQUIREMENTS PER 325-112(C):

Required items that are deemed to be not applicable to the proposed project may be waived by the Zoning Administrator. Detailed site analysis per 325-112(C)(8) may be required; verify with Village staff. Submittal materials may be submitted as pdf files via email in lieu of printed copies by arrangement with the Village Planning Director.

(1) Written description of the intended use describing in reasonable detail the:

(a) Existing zoning district(s) [and proposed zoning district(s) if different].
The proposed improvements and site are located on lands currently zoned parks and open space; this zoning designation is not expected to change.

(b) Land use plan map designation(s).
The proposed improvements and site are located on lands with land use designation parks and open space. Refer to Attachment A (an excerpt map from Village of Cottage Grove planning) for the land use map.

(c) Description of existing environmental features.
Existing uses coincide with the current zoning and land use designations; the site in general consists of areas of minimal to flat land gradients with grass playing fields, playground equipment areas, small outdoor pavilions, and associated access ways and parking for patrons. The site contains minimal trees, shrubs and other landscaping; there are no other significant environmental features. There are no wetlands, environmental corridors, open waterways, or other environmentally sensitive areas.

(d) Current land uses present on the subject property.

See description under item (c) above.

(e) Proposed land uses for the subject property.
The proposed uses will coincide with the current zoning and land use designations; the site will continue to consist of areas of minimal to flat land gradients with grass playing fields. The proposed improvements will include a splash pad and new building to serve as a restroom and shelter for the Village of Cottage Grove. The proposed building location is consistent with the Master Park Plan for this area.

(f) Projected number of residents, employees and daily customers.
There will be no residents or no full-time employees. The shelter will be open to the public and designed to accommodate public events and reservations for group up to 100. The splash pad is design to accommodate 70-100 children.

(g) Proposed amount of dwelling units, floor area, impervious surface area and landscape surface area and resulting site density, floor area ratio, impervious surface area ratio and landscape surface area ratio.

There will be no dwelling units within the proposed restroom and shelter building. The building will be one story above grade.

(h) Operational considerations relating to hours of operation, projected normal and peak water usage, sanitary sewer or septic loadings and traffic generation.

The shelter and splash pad will be open during regular park hours as outlined in Chapter 230-3 unless otherwise approved by the Park, Recreation and Forestry Committee or Village Board.

Floor Area is: 3,050 SF
(1,150 SF Enclosed Restrooms, Mechanical and Storage)
(1,900 SF Open Shelter)

The property owned by the Village of Cottage Grove is:
Parcel # 112/0711-162-9025-1

LOT 1 CSM 12707 CS80/131-133 06-15-09 DESCR AS SEC 16-07-11 PRT OF NW1/4 NW1/4 & PRT SW1/4 NW1/4

Parcel area is 28.556 acres (1,243,899.36 SF).

The proposed physical improvements and associated areas and ratios are defined as follows:

Floor Area Ratio: 0.0024 =
(3,050 sf / 1,243,899.36 sf)

Impervious Surface Area Ratio: 0.072 =
(74,000 sf existing + 12,300 sf proposed + 3,050 sf floor area = 89,550 sf / 1,243,899.36 sf)

Landscape Surface Ratio: 0.0044 =
(4,500 sf existing + 1000 sf proposed = 5,500 sf / 1,243,899.36 sf)

Site Density Ratio: 0.076 =
(3,050 sf + 86,500 sf + 5,500 sf = 95,050 sf / 1,243,899.36 sf)

Utilities

(i) Operational considerations relating to potential nuisance creation pertaining to noncompliance with the performance standards addressed in Article VI, including street access, traffic visibility, parking, loading, exterior storage, exterior lighting, vibration, noise, air pollution, odor, electromagnetic radiation, glare and heat, fire and explosion, toxic or noxious materials, waste materials, drainage and hazardous materials. If no such nuisances will be created (as indicated by complete and continuous compliance with the provisions of Article VI), then the statement "The proposed development shall comply with all requirements of Article VI" shall be provided.

The proposed development shall comply with all requirements of Article VI; no nuisance conditions will be created by the proposed clubhouse and related site improvements. Minimal site lighting (building wall packs and single 20' pole light) will be provided for security purposes and will meet requirements for lighting due to distance from property line (~ 250 FT).

(j) Exterior building and fencing materials.

The exterior of the proposed restroom and shelter building will be masonry. Refer to Attachment F for the brick and block examples respectively. Fencing would be designed to match the existing playground barrier, consisting of recycled plastic lumber rails and pickets. Fencing is included in the project as an additive alternate.

(k) Possible future expansion and related implications for § 325-112C(1)(a) through (j) above.

There is no future expansion intended for the restroom and shelter building or splash pad. See Master Plan, <u>Attachment B</u>, for future park improvements.

(l) Any other information pertinent to adequate understanding by the Plan Commission of the intended use and its relation to nearby properties.

The purpose of the existing park and playing fields is to promote recreation and outdoor activities by making available such facilities; the park provides for an improved quality of life for all that make use of these facilities. The proposed restroom, shelter and splash pad will be important to the continued promotion of the park, and be conducive to the continuing improvement of the park.

(2) A small location map scalable at 11 inches by 17 inches showing the subject property, all properties within 300 feet and illustrating its relationship to the nearest street. intersection. (A photocopy of the pertinent section of the Village's Official Zoning Map with the subject property clearly indicated shall suffice to meet this requirement.)

Refer to <u>Attachment C</u> for property site plan drawing.

(3) A property site plan drawing (and reduction scalable at 11 inches by 17 inches) which includes:

(a) A title block which indicates the name, address and phone number(s) of the current property owner and/or agent(s) (developer, architect, engineer, planner) for the project.

(b) The date of the original plan and the latest date of revision to the plan.

(c) A North arrow and a graphic scale. Said scale shall not be smaller than one inch equals 100 feet.

(d) A legal description of the subject property.

(e) All property lines and existing and proposed right-of-way lines with bearings and dimensions clearly labeled.

(f) All existing and proposed easement lines and dimensions with a key provided and explained on the margins of the plan as to ownership and purpose.

(g) All required building setback lines.

(h) All existing and proposed buildings, structures and paved areas, including building entrances, walks, drives, decks, patios, fences, walls and utility and drainage systems, connections and fixtures.

(i) The location and dimension (cross section and entry throat) of all access points onto public streets.

(j) The location and dimension of all on-site parking (and off-site parking provisions if they are to be employed), including a summary of the number of parking stalls provided versus required by this chapter.

(k) The location and dimension of all loading and service areas on the subject property and labels indicating the dimension of such areas.

There is no new loading or service area proposed for the site or proposed building.

(l) The location of all outdoor storage areas and the design of all screening devices.

There is no new outdoor storage proposed for the site or proposed building.

(m) The location, type, height, size and lighting of all signage on the subject property.

There is no new signage proposed for the site or proposed building.

(n) The location, height, design/type, illumination power and orientation of all exterior lighting on the subject property, including the clear demonstration of compliance with a limit of 1.0 footcandles at nonresidential property lines and 0.5 footcandles at residential property lines.

(o) The location and type of any permanently protected green space areas.

(p) The location of existing and proposed drainage facilities.

(q) In the legend, data for the subject property:

[1] Lot area;

[2] Floor area;

[3] Floor area ratio (b/a);

[4] Impervious surface area;

[5] Impervious surface ratio (d/a); and

[6] Building height.

(4) A detailed landscaping plan of the subject property, at the same scale as the main plan (and reduction scalable at 11 inches by 17 inches), showing the location of all required bufferyard and landscaping areas and existing and proposed landscape point

fencing and berm options for meeting said requirements. The landscaping plan shall demonstrate complete compliance with the requirements of Village landscaping requirements. (NOTE: the individual plant locations and species, fencing types and heights and berm heights need to be provided.)

Refer to Attachment C for site plan by MSA Professional Services, 11/26/2019.

(5) A grading and erosion control plan at the same scale as the main plan (and reduction scalable at 11 inches by 17 inches) showing existing and proposed grades, including retention walls and related devices, and erosion control measures per Wisconsin Administrative Code, COMM Chapter 21, Uniform Dwelling Code, and Chapter 65, Commercial Construction.

Refer to Attachments D and E for grading and erosion control plan by MSA Professional Services, 11/26/2019.

(6) Elevation drawings of proposed buildings or proposed remodeling of existing buildings showing finished exterior treatment shall also be submitted, with adequate labels provided to clearly depict exterior materials, texture, color and overall appearance. Perspective renderings of the proposed project and/or photos of similar structures may be submitted, but not in lieu of adequate drawings showing the actual intended appearance of the buildings.

Refer to Attachment F proposed building exterior elevations.

(7) A certified survey may be required by the Zoning Administrator in instances where he determines compliance with setback requirements may be difficult. The survey shall be prepared by a registered land surveyor and shall depict property lines and proposed buildings, structures and paved areas.

Refer to Attachment I for property CSM.

Attachment A – Land-use Map

Phoebe Bakken Park

Parcels within 300'

Village of Cottage Grove, Dane County, Wisconsin

Map Number	Parcel Number	Owner	PropertyAddress	Billing Street Address	Billing City State Zip
1	071116182001	WI DOT		2101 WRIGHT ST	MADISON WI 53704
2	071116206879	HYDRITE CHEMICAL CO		PO BOX 59365	SCHAUMBURG IL 60159-0365
3	071116222093	Current Owner	401 PROGRESS DR	475 PROGRESS DR	COTTAGE GROVE WI 53527
4	071116222093	Current Owner	429 PROGRESS DR	475 PROGRESS DR	COTTAGE GROVE WI 53527
5	071116222315	Current Owner	375 PROGRESS DR	375 PROGRESS DR	COTTAGE GROVE WI 53527
6	071116222315	Current Owner	379 PROGRESS DR	375 PROGRESS DR	COTTAGE GROVE WI 53527
7	071116222539	STEVE B WOHLERS	351 PROGRESS DR	202 MARIA LN	COTTAGE GROVE WI 53527
8	071116222539	STEVE B WOHLERS	373 PROGRESS DR	202 MARIA LN	COTTAGE GROVE WI 53527
9	071116222753	J & M USELMAN LLC	321 PROGRESS DR	PO BOX 247	COTTAGE GROVE WI 53527
10	071116222977	301 PROGRESS LLC	301 PROGRESS DR	301 PROGRESS DR	COTTAGE GROVE WI 53527
11	071116222977	301 PROGRESS LLC	323 PROGRESS DR	301 PROGRESS DR	COTTAGE GROVE WI 53527
12	071116262335	COTTAGE GROVE, VILLAGE OF		221 E COTTAGE GROVE RD	COTTAGE GROVE WI 53527
13	071116263889	COTTAGE GROVE, VILLAGE OF		221 E COTTAGE GROVE RD	COTTAGE GROVE WI 53527
14	071116264342	COTTAGE GROVE, VILLAGE OF		221 E COTTAGE GROVE RD	COTTAGE GROVE WI 53527
15	071116265001	COTTAGE GROVE, VILLAGE OF		221 E COTTAGE GROVE RD	COTTAGE GROVE WI 53527
16	071116282206	COTTAGE GROVE, VILLAGE OF		221 E COTTAGE GROVE RD	COTTAGE GROVE WI 53527
17	071116282457	LANDMARK SERVICES COOPERATIVE	241 CLARK ST	PO BOX 277	COTTAGE GROVE WI 53527
18	071116282561	LANDMARK SERVICES COOPERATIVE		PO BOX 277	COTTAGE GROVE WI 53527
19	071116287431	WI DOT		2101 WRIGHT ST	MADISON WI 53704

Map Number	Parcel Number	Owner	PropertyAddress	Billing Street Address	Billing City State Zip
20	071116288501	COTTAGE GROVE, VILLAGE OF		4058 COUNTY HIGHWAY N	COTTAGE GROVE WI 53527
21	071116290019	CHRISTIAN M NELSON	203 GROVE ST	203 GROVE ST	COTTAGE GROVE WI 53527
22	071116290251	COTTAGE GROVE, VILLAGE OF		4058 COUNTY HIGHWAY N	COTTAGE GROVE WI 53527
23	071116290351	WRC SPORTS COMPLEX INC	4064 VILAS RD	PO BOX 45598	MADISON WI 53744-5598
24	071116292400	RICHARD J BOLLIG		4089 VILAS RD	COTTAGE GROVE WI 53527
25	071116296504	COTTAGE GROVE, VILLAGE OF		221 E COTTAGE GROVE RD	COTTAGE GROVE WI 53527
26	071116297221	HOLMES TR, TERRY & KATHLEEN	377 GROVE ST	377 GROVE ST	COTTAGE GROVE WI 53527
27	071116297761	LISA M HATTON	362 GROVE ST	362 GROVE ST	COTTAGE GROVE WI 53527
28	071116380211	LANDMARK SERVICES COOPERATIVE	203 W COTTAGE GROVE RD	PO BOX 277	COTTAGE GROVE WI 53527
29	071116381111	LAWRENCE D COOPER	357 GROVE ST	357 GROVE ST	COTTAGE GROVE WI 53527
30	071116381211	Current Owner	365 GROVE ST	365 GROVE ST	COTTAGE GROVE WI 53527
31	071116385015	EDWARD R ZABEL	4030 VILAS RD	4030 VILAS RD	COTTAGE GROVE WI 53527
32	071116385506	Current Owner	4090 VILAS RD	4090 VILAS RD	COTTAGE GROVE WI 53527
33	071116386103	RICHARD J BOLLIG	4089 VILAS RD	4089 VILAS RD	COTTAGE GROVE WI 53527
34	071116386505	TERRY VIAL	4075 VILAS RD	4075 VILAS RD	COTTAGE GROVE WI 53527
35	071117195004	JEFFREY R EVENSEN	2643 CLARK ST	2643 CLARK ST	COTTAGE GROVE WI 53527
36	071117195200	Current Owner	4136 VILAS RD	4136 VILAS RD	COTTAGE GROVE WI 53527
37	071117196021	WIDEN REV TR, REED C & LEANNE M	4141 VILAS RD	4141 VILAS RD	COTTAGE GROVE WI 53527

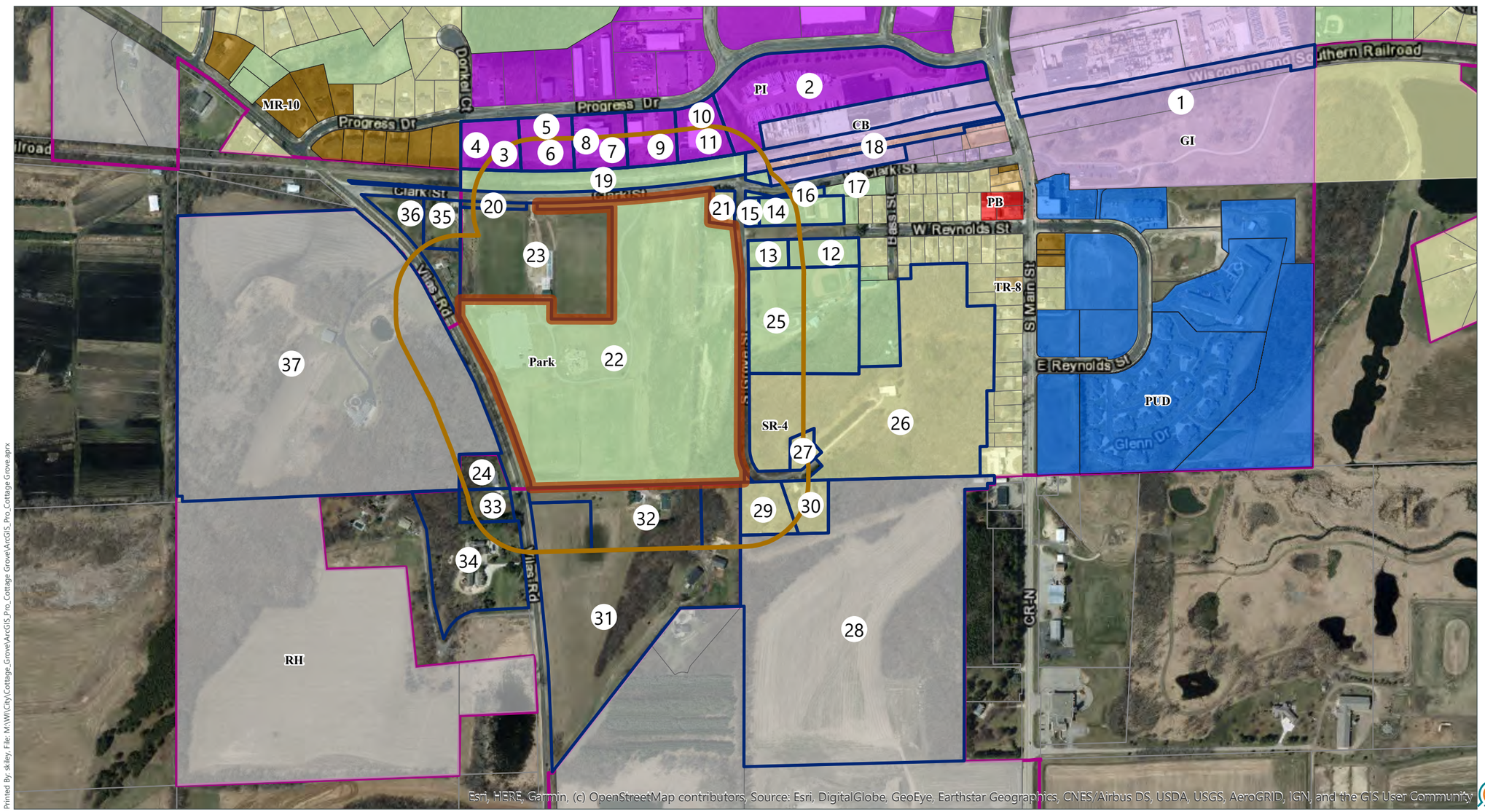

- Pheobe Bakken Park Boundary
- 300' Buffer of Bakken Park
- Parcels within 300' of Bakken Park
- SR-4 Single-Family Residential District
- TR-8 Two Family Residential District
- MR-12 Multi-Family Residential Distirct
- MR-10 Multi-Family Residential District
- HR-9 Historical Residential District
- CB Central Business District
- NB Neighborhood Business District
- PB Planned Business District
- NO Neighborhood Office District
- PO Planned Office District
- GI General Industrial District
- PI Planned Industrial District
- RH Rural Holding District
- PUD Planned Unit Development
- Park
- Village Boundary

Data Sources:
Village of Cottage Grove
Dane County, WI
Esri

MSA

0 300 600 Feet

Print Date: 11/26/2019

Printed By: skiley, File: M:\Wi\City\Cottage_Grove\ArcGIS_Pro_Cottage Grove\ArcGIS_Pro_Cottage Grove.aprx

Attachment B – Existing Master Plan

MSA PROFESSIONAL SERVICES

BAKKEN PARK CONCEPT PLAN

DIAGRAMATIC
PROPOSED DESIGN
01/21/19

Date: 04/28/15
Project: 940801 (SMT)

0 75 150 300 FEET

COTTAGE GROVE

Attachment C – Site Plan

SITE LEGAL DESCRIPTION:

Parcel # 112/0711-162-9025-1

LOT 1 CSM 12707 CS80/131-133 06-15-09 DESCR AS SEC 16-07-11
PRT OF NW1/4 NW1/4 & PRT SW1/4 NW1/4

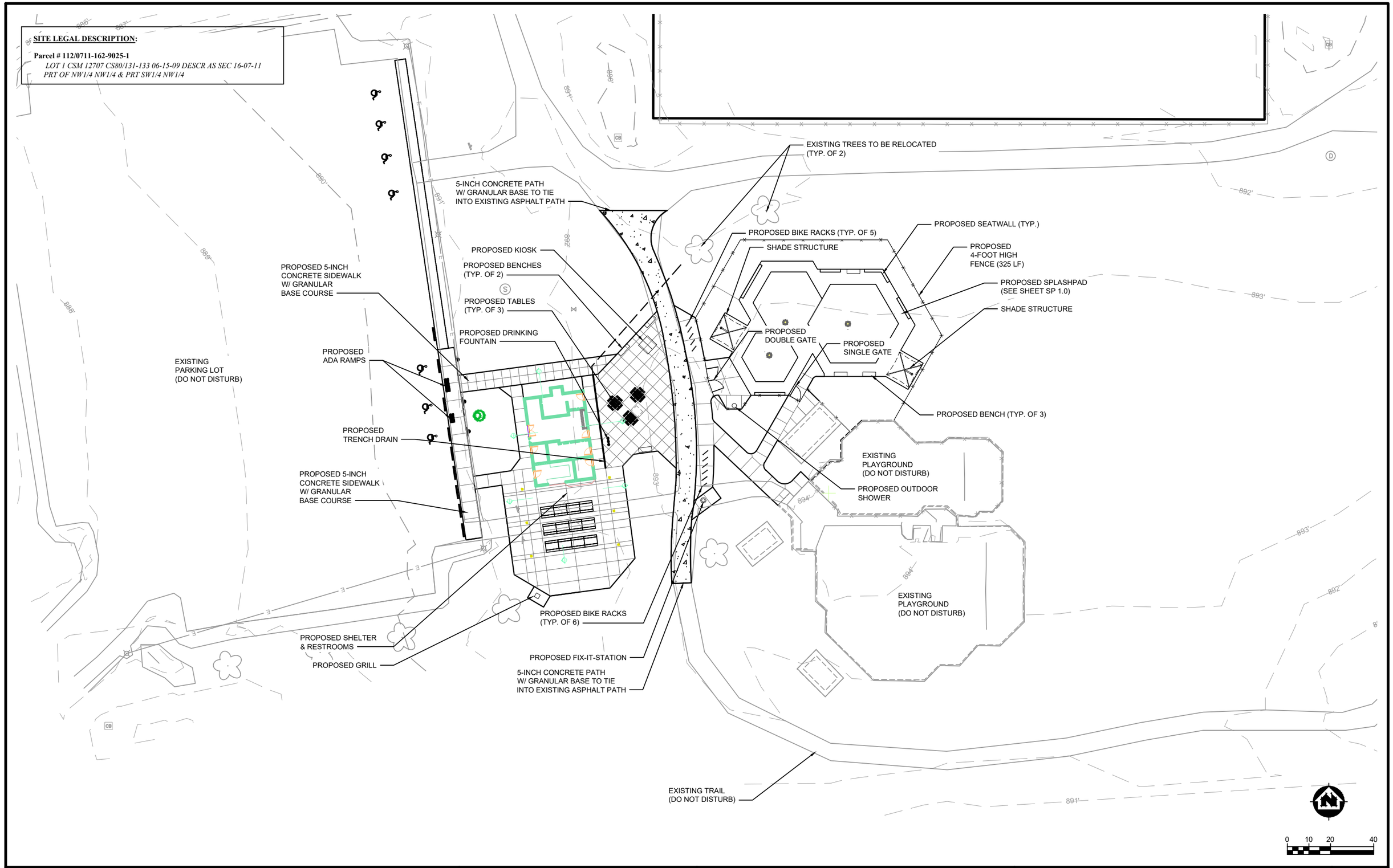

PROJECT NO.: 00094041	SCALE: AS SHOWN	NO.	DATE	REVISION	BY
PROJECT DATE: .	DRAWN BY: INIT	.	.	.	.
	DESIGNED BY: INIT	.	.	.	.
	CHECKED BY: INIT	.	.	.	.

PLOT DATE: Tuesday, November 26, 2019 12:03:52 PM, G:\00\00094\00094041\CADD\Construction Documents\00094041 Site Plan.dwg

MSA

ENGINEERING | ARCHITECTURE | SURVEYING
FUNDING | PLANNING | ENVIRONMENTAL

www.msa-ps.com

© MSA Professional Services, Inc.

PHOEBE BAKKEN MEMORIAL PARK IMPROVEMENTS
VILLAGE OF COTTAGE GROVE
COTTAGE GROVE, WI

SITE PLAN

PROJECT NO. 00094041

SHEET C1.7

PHOEBE BAKKEN MEMORIAL PARK

Preliminary Site Plan - Splash Pad and Shelter

Village of Cottage Grove
July 17, 2019

MSA

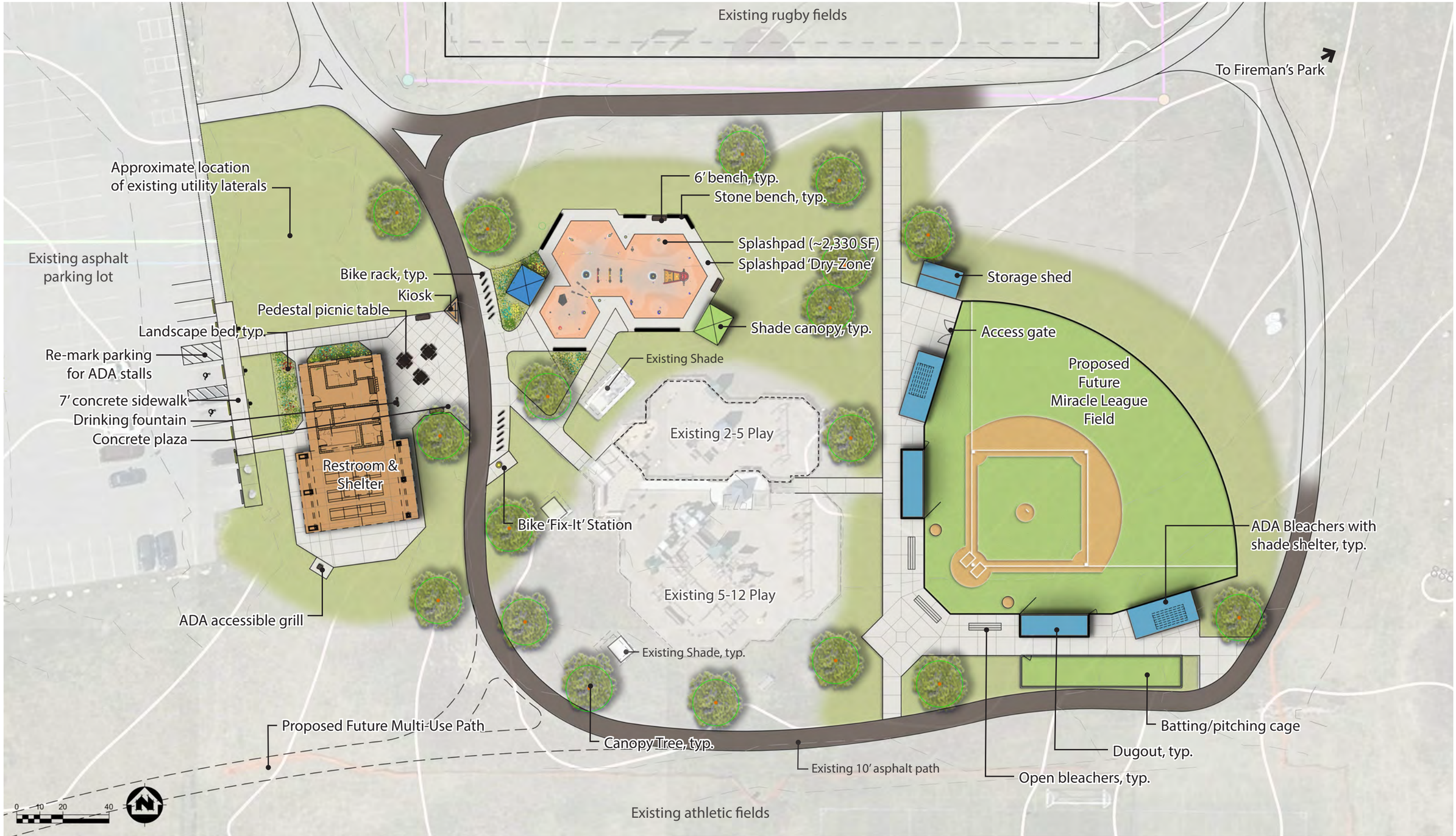

COTTAGE
GROVE
MSA

Attachment D – Grading Plan

Attachment E – Erosion Control Plan

Attachment F – Architectural Plans

PROJECT DATE: 7/9/2019	DRAWN BY: JFB	No	DATE	REVISIONS	BY
	DESIGNED BY: ECA				
	CHECKED BY: ECA				

PRELIMINARY

PLOT DATE: 11/26/2019 9:42:20 AM , \\msa-ps.com\fs\Project\00\00094\00094041\CADD\Construction Documents\BIM\00094041 - CG BAKKEN SHELTER CENTRAL_JFB(Recovery).rvt

MSA

ENGINEERING | ARCHITECTURE | SURVEYING
FUNDING | PLANNING | ENVIRONMENTAL
1702 Pankratz Street, Madison, WI 53704
(608) 242-7779 www.msa-ps.com

© MSA Professional Services, Inc.

VILLAGE OF COTTAGE GROVE
2020 BAKKEN PARK IMPROVEMENT
COTTAGE GROVE, WI

PERSPECTIVES

PROJECT NO.
00094041

SHEET
T1.2

GENERAL PLAN NOTES:

A. ALL DIMENSIONING IS TO FACE OF STUD, FRAMING OR CONCRETE.
B. DO NOT SCALE DRAWINGS. IF DIMENSIONS ARE IN QUESTION, THE CONTRACTOR SHALL BE RESPONSIBLE FOR OBTAINING CLARIFICATION FROM THE ARCHITECT BEFORE CONTINUING WITH CONSTRUCTION.
C. THE CONTRACT DOCUMENTS CONSIST OF THE SPECIFICATION MANUAL AND DRAWINGS WHICH ARE INTENDED TO BE COMPLEMENTARY AND TO BE USED IN CONJUNCTION WITH ONE ANOTHER.
D. IF DISCREPANCIES OCCUR BETWEEN THE SPECIFICATION MANUAL AND THE DRAWINGS, NOTIFY THE ARCHITECT FOR A RESOLUTION.
E. OPENINGS FOR PLUMBING, VENTILATING, AND ELECTRICAL WORK IN WALLS, FLOORS, CEILING, AND ROOF SHALL BE PROVIDED BY THE GC LOCATION AND SIZE SHALL BE THE RESPONSIBILITY OF THE RESPECTIVE CONTRACTORS.
F. SLOPE FLOOR SLABS TO FLOOR DRAINS. SEE FOUNDATION PLAN AND COORDINATE WITH PLUMBING DRAWINGS. (MAX FLOOR SLOPE 1/4" PER FT).
G. CONTRACTOR TO COORDINATE STRUCTURAL, ARCHITECTURAL, HVAC, AND PLUMBING PLANS FOR DETAILS, DIMENSIONS, ELEVATIONS, OPENINGS, INSERTS, ETC. NOTIFY ARCHITECT OF ANY VARIANCE BEFORE COMMENCING CONSTRUCTION.
H. IN NO CASE SHALL STRUCTURAL ALTERATIONS OR WORK AFFECTING A STRUCTURAL MEMBER BE MADE, UNLESS APPROVED BY THE ENGINEER.
I. GENERAL CONTRACTOR SHALL PROVIDE ALL INTEGRAL CONCRETE EQUIPMENT PADS INDICATED ON THE PLUMBING, HVAC AND ELECTRICAL DRAWINGS INSIDE THE BUILDING.

KEYNOTES

#

1 FREE STANDING HIGH-LOW DRINKING FOUNTAIN WITH CENTRAL BOTTLE FILLER. SEE SITE PLAN FOR EXACT LOCATION AND PLUMBING DRAWINGS.
2 ACCESSIBLE 20"x42" CHANGING BENCH - SEE DETAIL 8/A5.4
3 LOCKERS ON 8" HIGH x8" DEEP CONCRETE CURB.
4 LAUNDRY TUB- SEE PLUMBING
5 ELECTRICAL SERVICE - SEE ELECTRICAL
6 WATER SERVICE - SEE PLUMBING
7 AREA FOR IRRIGATION EQUIPMENT - SEE PLUMBING
8 REFRIDGERATOR BY OWNER (NIC)
9 BABY CHANGING STATION
10 ROOM SIGNAGE - SEE DETAIL 5/A5.1
11 EXTERIOR COUNTER - SEE DETAIL 7/A5.1
12 SOLID SURFACE COUNTERTOP - SEE DETIAL 8/A5.1
13 ATTIC ACCESS HATCH - SEE DETAIL 6/A5.1
14 FIRE EXTINGUISHER w/ WALL BRACKET
15 DIMENSION IS ALSO THE ROUGH WINDOW OPENING ABOVE
16 HALF-HIGH WALL - SEE DETAIL 2/A5.1
17 GRATING w/ SUPPORT OVER PIT
18 ROOF LINE ABOVE; TYPICAL
19 ROOF/CEILING HEIGHT TRANSITION ABOVE

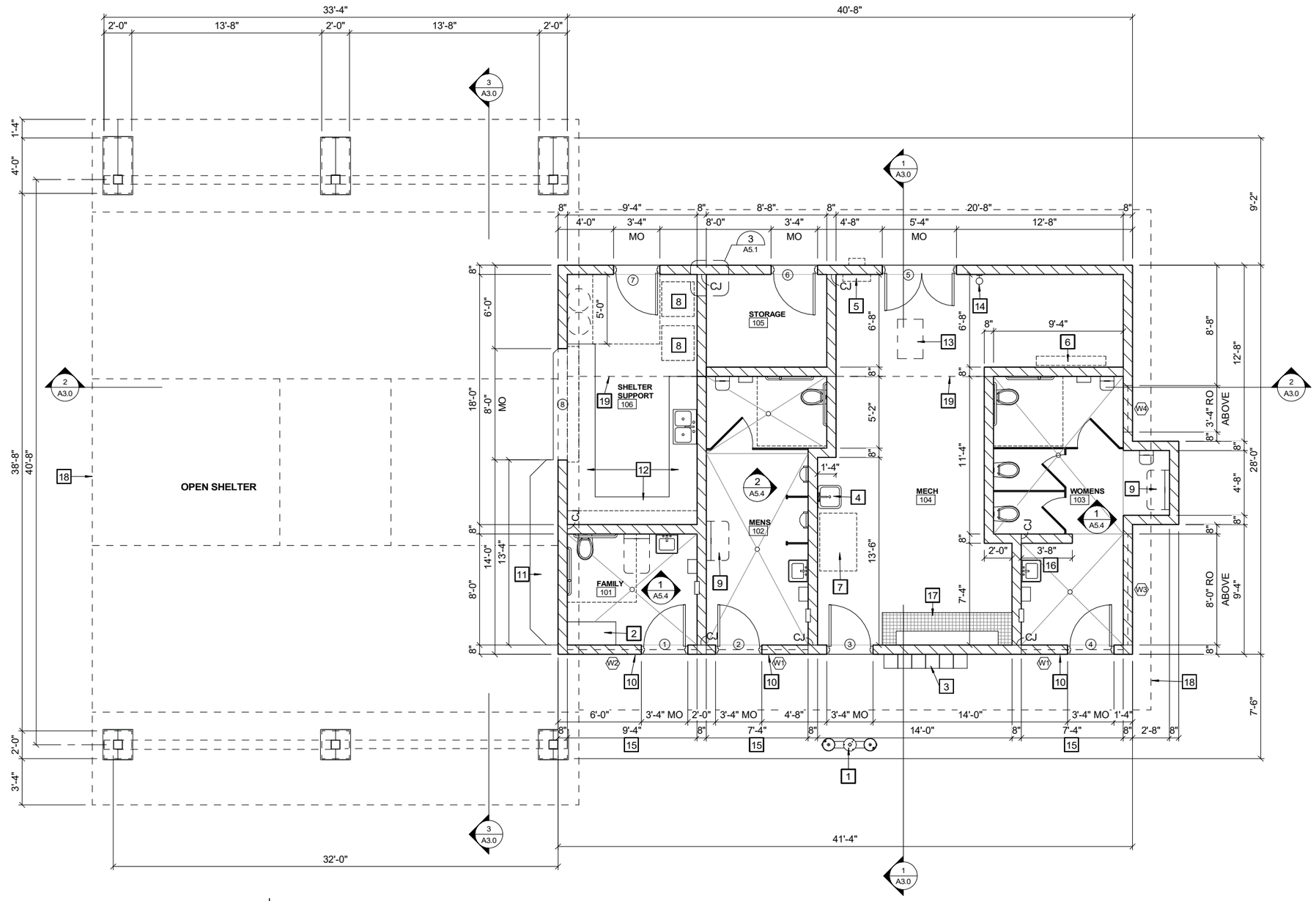

FLOOR PLAN

0 2 4 8
1/4" = 1'-0" (22x24)
1/8" = 1'-0" (11x17)

PROJECT DATE: 7/9/2019	DRAWN BY: JFB	No	DATE	REVISIONS	BY	
	DESIGNED BY: ECA					
	CHECKED BY: ECA					

PRELIMINARY

PLOT DATE: 11/26/2019 9:42:19 AM , \\msa-ps.com\fs\Project\00\00094\00094041\CADD\Construction Documents\BIM\00094041 - CG BAKKEN SHELTER CENTRAL_JFB(Recovery).rvt

MSA

ENGINEERING | ARCHITECTURE | SURVEYING
FUNDING | PLANNING | ENVIRONMENTAL
1702 Pankratz Street, Madison, WI 53704
(608) 242-7779 www.msa-ps.com

© MSA Professional Services, Inc.

VILLAGE OF COTTAGE GROVE
2020 BAKKEN PARK IMPROVEMENT
COTTAGE GROVE, WI

FLOOR PLAN

PROJECT NO. 00094041
SHEET A1.0

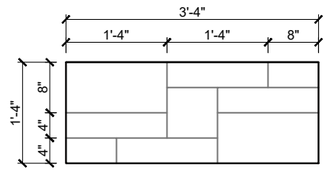

DECORATIVE CMU - TYPE 'A' PATTERN

0 6" 1' 2'
1" = 1'-0" (22x34)
1/2" = 1'-0" (11x17)

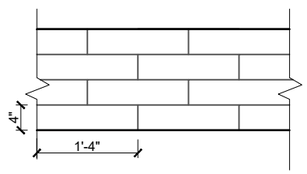

DECORATIVE CMU - TYPE 'B' PATTERN

0 6" 1' 2'
1" = 1'-0" (22x34)
1/2" = 1'-0" (11x17)

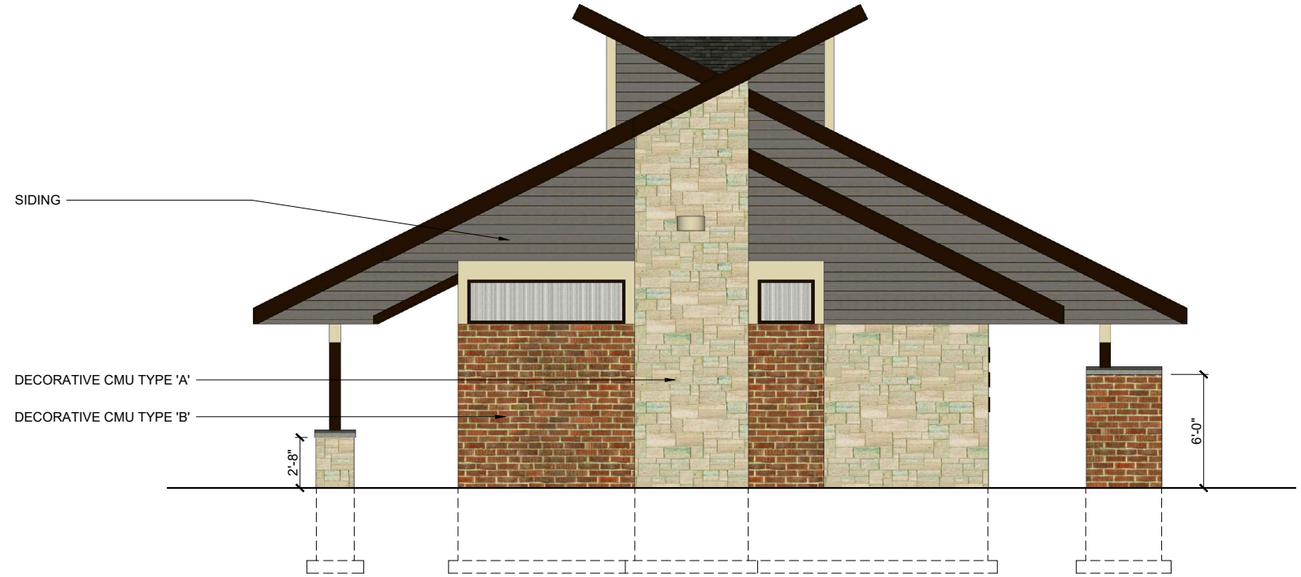

NORTH EXTERIOR ELEVATION

0 2 4 8
1/4" = 1'-0" (22x34)
1/8" = 1'-0" (11x17)

EAST EXTERIOR ELEVATION

		NO.	DATE	REVISION	BY
PROJECT DATE: .	DRAWN BY: JFB	.	.	.	.
	DESIGNED BY: ECA	.	.	.	.
	CHECKED BY: Init	.	.	.	.

PLOT DATE: Tuesday, November 26, 2019 9:34:08 AM, \\msa-ps.com\fs\project\00\00094\00094041\CADD\Construction Documents\00094041 - A2.0 EXTERIOR ELEVATIONS 2.dwg

MSA
ENGINEERING | ARCHITECTURE | SURVEYING
FUNDING | PLANNING | ENVIRONMENTAL
1702 Pankratz St Madison, WI 53704
(608) 242-7779 www.msa-ps.com
©MSA Professional Services, Inc.

PHOEBE BAKKEN MEMORIAL PARK IMPROVEMENTS
VILLAGE OF COTTAGE GROVE
COTTAGE GROVE, WI

EXTERIOR ELEVATIONS

PROJECT NO. 00094041
SHEET A2.0

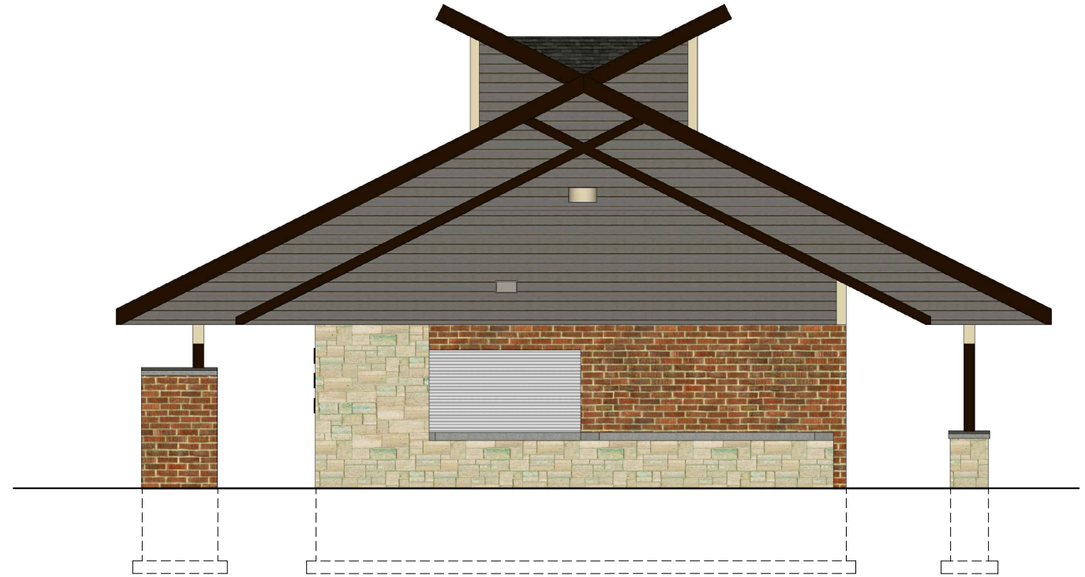

SOUTH EXTERIOR ELEVATION

0 2 4 8 1/4" = 1'-0" (22x34)
1/8" = 1'-0" (11x17)

WEST EXTERIOR ELEVATION

0 2 4 8 1/4" = 1'-0" (22x34)
1/8" = 1'-0" (11x17)

		NO.	DATE	REVISION	BY
PROJECT DATE: .	DRAWN BY: JFB	.	.	.	.
	DESIGNED BY: ECA	.	.	.	.
	CHECKED BY: Init	.	.	.	.

PLOT DATE: Tuesday, November 26, 2019 9:34:10 AM, \\msa-ps.com\fs\project\00\00094\00094041\CADD\Construction Documents\00094041 - A2.1 EXTERIOR ELEVATIONS 2.dwg

MSA
ENGINEERING | ARCHITECTURE | SURVEYING
FUNDING | PLANNING | ENVIRONMENTAL
1702 Pankratz St Madison, WI 53704
(608) 242-7779 www.msa-ps.com
©MSA Professional Services, Inc.

PHOEBE BAKKEN MEMORIAL PARK IMPROVEMENTS
VILLAGE OF COTTAGE GROVE
COTTAGE GROVE, WI

EXTERIOR ELEVATIONS

PROJECT NO. 00094041
SHEET A2.1

DRAFT FINISH SELECTION LIST
PHOEBE BAKKEN PARK BUILDING

Village of Cottage Grove
MSA Project Number #00094041
November 26, 2019

Notes:

1. Tentative selections pending Village approval.

<u>COLOR SELECTIONS</u>

Aluminum Windows: Dark Bronze Anodized

Metal Shingles (Decra): Old Hickory

Sheet Metal:

Fascia Cover/Drip Edge: Dark Bronze

Masonry:

Decorative CMU Type A:

Material (CountyStone): Cream 63-080C (in varied sizes)

Mortar: Matching

Net Weep Vents: Cream

Decorative CMU Type B:

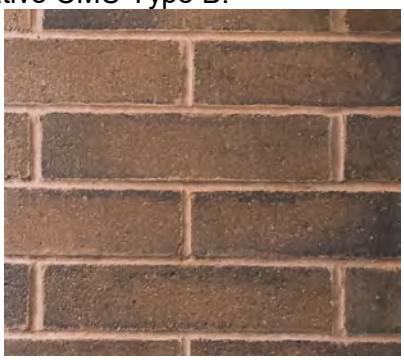

Material: Autumn Blend - smooth (Heritage)

Mortar: Matching

Net Weep Vents: Brown

Cast Stone Caps: cream

Exterior HVAC Louvers:	Wall; similar match to siding Soffit; similar match to soffit
Drinking Fountains:	Textured Pyrite (brown)
Site Rinse Shower:	Textured Pyrite (brown)

Siding materials (LP Smartside):

Lap Siding- Bedrock	Trim & Soffit- Sand	Accent Trim- Grizzly

Attachment G – Lighting Design

GENERAL PLAN NOTES:

A. EC SHALL COORDINATE WITH OTHER TRADES IN THE FIELD.
B. EC SHALL PROVIDE ALL OPTIONS AND ACCESSORIES NEEDED TO PROVIDE A FULLY FUNCTIONAL AND TESTED LIGHTING SYSTEM.

KEYNOTES

1 LIGHT FIXTURE IS MOUNTED AT 8'-8".
2 LIGHT FIXTURE IS MOUNTED AT 12'.
3 LIGHT FIXTURE IS MOUNTED AT 15'.
4 LIGHT FIXTURE IS MOUNTED AT 15'-6".

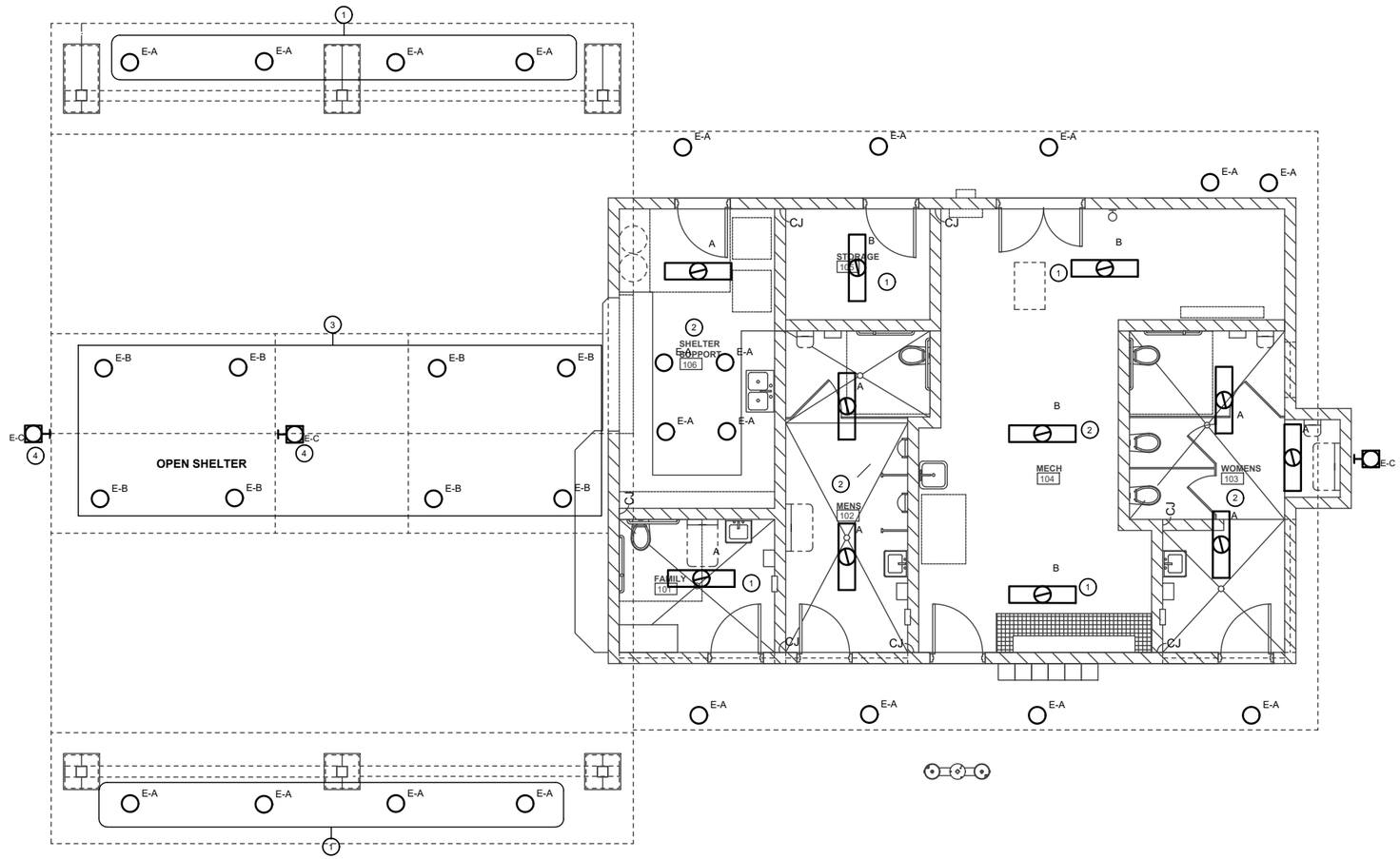

PLAN NORTH

1 LIGHTING FLOOR PLAN

SCALE: 0 2 4 8 1/4" = 1'-0" (22x34) 1/8" = 1'-0" (11x17)

OTIE An Oneida ESC Group Company

1033 N. Mayfair Rd, Suite 200, Milwaukee, WI 53226
ph. 414-607-6762 Job# 2020xxx

			NO.	DATE	REVISION	BY
PROJECT DATE:	DRAWN BY:	KRH	-	-	PRELIMINARY	-
	DESIGNED BY:	KRH	-	-		-
	CHECKED BY:	ATW	-	-		-

PLOT DATE: Tuesday, November 26, 2019 10:41:54 AM, Q:\2020 Projects\2020xxx - MSA Cottage Grove Bakken Park\02 Design\02 Drawings\Electrical\E2.0 LIGHTING SHEET.dwg

MSA

ENGINEERING | ARCHITECTURE | SURVEYING
FUNDING | PLANNING | ENVIRONMENTAL
1702 Pankratz Street, Madison, WI 53704
(608) 242-7779 www.msa-ps.com
©MSA Professional Services, Inc.

VILLAGE OF COTTAGE GROVE
2020 BAKKEN PARK IMPROVEMENT
COTTAGE GROVE, WI

LIGHTING FLOOR PLAN

PROJECT NO. 00094041

SHEET E2.0

GENERAL PLAN NOTES:

A. EC SHALL COORDINATE WITH OTHER TRADES IN THE FIELD.
B. EC SHALL PROVIDE ALL OPTIONS AND ACCESSORIES NEEDED TO PROVIDE A FULLY FUNCTIONAL AND TESTED LIGHTING SYSTEM.

KEYNOTES

1 FIXTURE TO BE MOUNTED ON POLE 25' AND CONCRETE BASE EXTENDING 3' ABOVE FINISHED GRADE, SEE DETAIL 2 ON SHEET E2.1 FOR ADDITIONAL DETAILS.

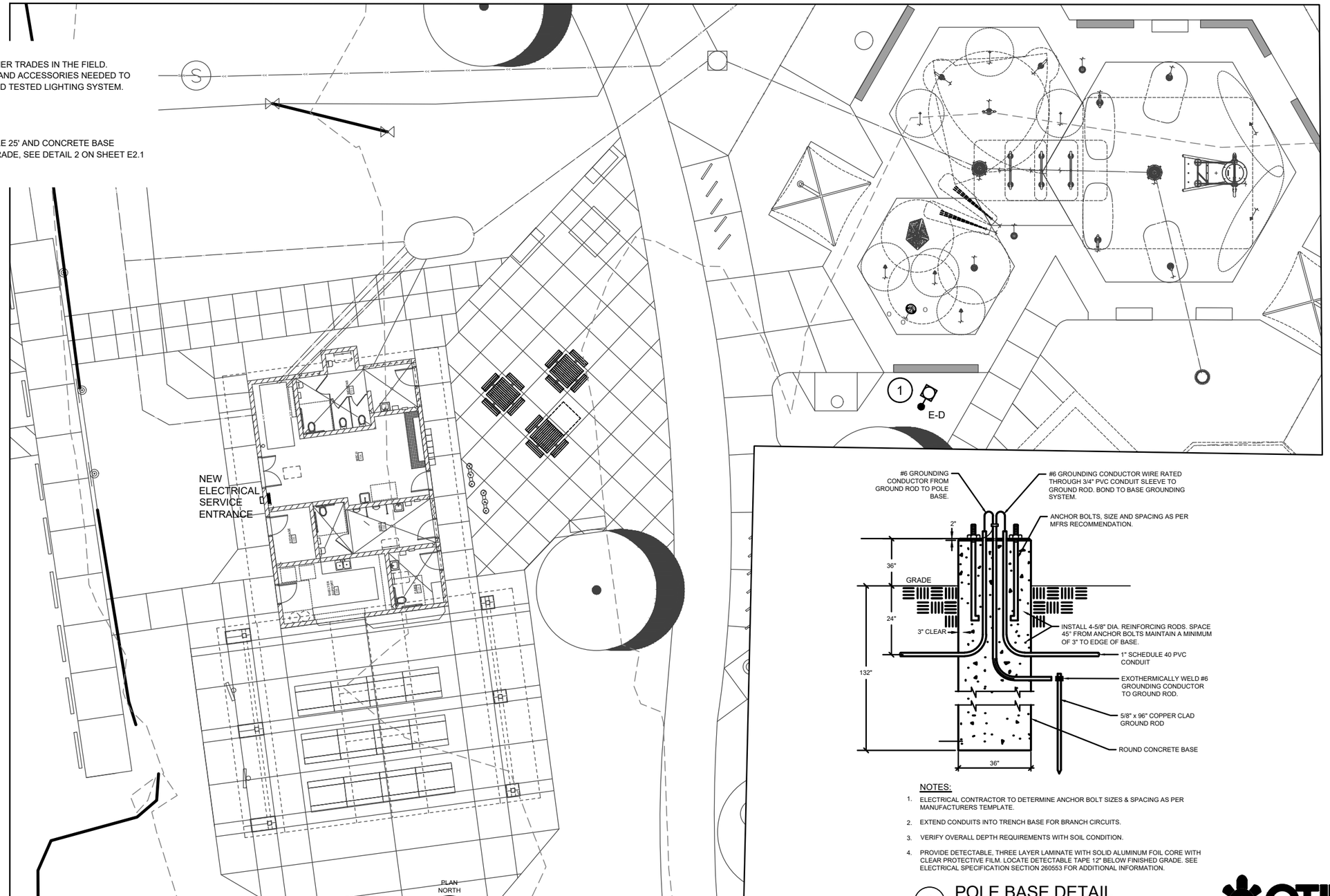

1 ELECTRICAL SITE PLAN

SCALE: 0 4 8 16 1/8" = 1'-0" (22x34) 1/16" = 1'-0" (11x17)

NOTES:

1. ELECTRICAL CONTRACTOR TO DETERMINE ANCHOR BOLT SIZES & SPACING AS PER MANUFACTURERS TEMPLATE.
2. EXTEND CONDUITS INTO TRENCH BASE FOR BRANCH CIRCUITS.
3. VERIFY OVERALL DEPTH REQUIREMENTS WITH SOIL CONDITION.
4. PROVIDE DETECTABLE, THREE LAYER LAMINATE WITH SOLID ALUMINUM FOIL CORE WITH CLEAR PROTECTIVE FILM. LOCATE DETECTABLE TAPE 12" BELOW FINISHED GRADE. SEE ELECTRICAL SPECIFICATION SECTION 260553 FOR ADDITIONAL INFORMATION.

2 POLE BASE DETAIL

SCALE: NTS

OTIE
An Oneida ESC Group Company
1033 N. Mayfair Rd, Suite 200, Milwaukee, WI 53226
ph. 414-607-6762 Job# 2020xxx

PROJECT DATE:		NO.	DATE	REVISION	BY
	DRAWN BY: KRH	.	.	PRELIMINARY	.
	DESIGNED BY: KRH	.	.		.
	CHECKED BY: ATW	.	.		.

PLOT DATE: Tuesday, November 26, 2019 10:39:38 AM, Q:\2020 Projects\2020xxx - MSA Cottage Grove Bakken Park\02 Design\02 Drawings\Electrical\E2.1 SITE LIGHTING SHEET.dwg

MSA
ENGINEERING | ARCHITECTURE | SURVEYING
FUNDING | PLANNING | ENVIRONMENTAL
1702 Pankratz Street, Madison, WI 53704
(608) 242-7779 www.msa-ps.com

©MSA Professional Services, Inc.

VILLAGE OF COTTAGE GROVE
2020 BAKKEN PARK IMPROVEMENT
COTTAGE GROVE, WI

ELECTRICAL SITE PLAN

PROJECT NO. 00094041

SHEET E2.1

EXTERIOR LIGHTING FIXTURE SCHEDULE

PLAN ID	DESCRIPTION	VOLTAGE	GENERAL FIXTURE CHARACTERISTICS			MOUNTING						LAMP INFORMATION			FIXTURE INPUT			MANUFACTURER INFORMATION			NOTES
			FINISH	FEATURE	SPECIAL	TYPE	LOC	HEIGHT	BASE	POLE TYPE	SPECIAL	#/FIX	TYPE	WATT	INPUT WATTS	INPUT VA	PF	BASE MANUFACTURER	CATALOG NUMBER	ACCEPTABLE ALT. MFR.	
E-A	LOW DOWNLIGHT	120V		WET LOC.		RECESSED		VARIES				1	LED 4000K	12	12	13.33333333	0.90	HUBBELL	LTR-4RD-H-SL10L-DM1-LTR-4RD-T-SL40K8MDS		
E-B	HIGH DOWNLIGHT	120V		WET LOC.		RECESSED		VARIES				1	LED 4000K	35	35	38.88888889	0.90	HUBBELL	LTR-4RD-H-ML30L-DM1 LTR-4RD-T-ML40K8WDS		
E-C	HALF MOON	120V				WALL		VARIES				1	LED 4000K	52	52	57.77777778	0.90	DURAGUARD	HMWP-UDQF1X46U4KZ		
E-D	AREA	120V				POLE	POLE	25'				1	LED 4000K	140	140	155.5555556	0.90	KIM LIGHTING	UR20-56L-140-4K7-5W-UNV		

INTERIOR LIGHTING FIXTURE SCHEDULE

PLAN ID	DESCRIPTION	VOLTAGE	GENERAL FIXTURE CHARACTERISTICS			MOUNTING			LAMP INFORMATION				FIXTURE INPUT			MANUFACTURER INFORMATION			NOTES
			FINISH	FEATURE	SPECIAL	TYPE	LOC	HEIGHT	#/FIX	TYPE	°K	WATT.	INPUT WATTS	INPUT VA	PF	BASE MANUFACTURER	CATALOG NUMBER	ACCEPTABLE ALT. MFR.	
A	VANDAL RESISTANT	120V		VANDAL RESIST. WET LOC.		SURFACE		VARIES	1	LED	4000K	18	18.00	20.00	0.9	HUBBELL	LXEN4-4000KW-RFA-EDU		
B	STRIP FIXTURE	120V				SURFACE		VARIES	1	LED	4000K	40.2	40.20	44.67	0.9	COLUMBIA LIGHTING	CSL4-4040		

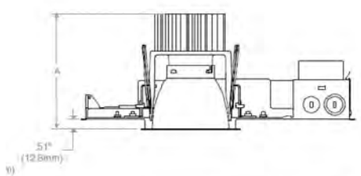

Dimensional Data		
Aperture		4.00" (101.6mm)
Flange:	Standard	5.25" (133.4mm)
	Flush Mount	4.50" (114.3mm)
Ceiling Cutout:	Standard	5.00" (127.0mm)
	Flush Mount	5.12" (130.0mm)
Ceiling Thickness:		0.50" to 2.00" (12.7mm to 50.8mm)

Lumen Package	"A"
06L-15L	4.97" (126.2mm)
20L-30L	6.15" (156.2mm)
35L-40L	7.33" (186.2mm)

FIXTURES E-A AND E-B

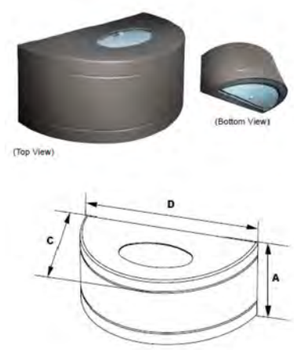

FIXTURE E-C

FIXTURE E-D

OTIE
An Oneida ESC Group Company

1033 N. Mayfair Rd, Suite 200, Milwaukee, WI 53226
ph. 414-607-6762 Job# 2020xxx

		NO.	DATE	REVISION	BY
PROJECT DATE:	DRAWN BY: KRH	-	-	PRELIMINARY	-
	DESIGNED BY: KRH	-	-		-
	CHECKED BY: ATW	-	-		-

PLOT DATE: Tuesday, November 26, 2019 10:58:16 AM, Q:\2020 Projects\2020xxx - MSA Cottage Grove Bakken Park\02 Design\02 Drawings\Electrical\E4.0 LIGHTING SCHEDULE.dwg

MSA
ENGINEERING | ARCHITECTURE | SURVEYING
FUNDING | PLANNING | ENVIRONMENTAL
1702 Pankratz Street, Madison, WI 53704
(608) 242-7779 www.msa-ps.com
©MSA Professional Services, Inc.

VILLAGE OF COTTAGE GROVE
2020 BAKKEN PARK IMPROVEMENT
COTTAGE GROVE, WI

LIGHTING SCHEDULES

PROJECT NO. 00094041
SHEET E4.0

prescolite

DATE:	LOCATION:
TYPE:	PROJECT:
CATALOG #:	

LTR-4RD

LITEISTRY 4" ROUND DOWNLIGHT

LITEISTRY™

PHOTOMETRY

DIMENSIONAL DRAWINGS

FEATURES

- 4" architectural LED downlight delivering 600 – 4000 lm
- Four beam distributions from 0.4 to 1.2 Spacing Criteria
- Quiet reflector appearance with superior 50° optical cutoff
- 2700K – 5000K, 80+ and 90+ CRI options
- Available for New Construction (non-IC), Retrofit (non-IC), IC and Chicago Plenum applications
- Variety of dimming protocol options including 0–10V, DALI, DMX, Lutron Forward Phase and EcoSystem
- NX Distributed Intelligence™ wired and wireless controls capability available

WET LOCATION

C US

ENERGY STAR

RELATED PRODUCTS

- 3" LITEISTRY Family
- 4" LITEISTRY Family
- 6" LITEISTRY Family

CONTROL TECHNOLOGY

NX DISTRIBUTED™ INTELLIGENCE

SPECIFICATIONS

CONSTRUCTION

- Standard Non-IC. Chicago Plenum, IC and Retrofit options
- New Construction: Painted black durable steel platform with pre-installed bar hangers
- Retrofit: Die cast aluminum mounting ring with 5-axis adjustable junction box
- Retrofit housing allows below ceiling installation without removing existing fixture
- Pre-wired junction box with snap-on covers for easy access
- Snap-in connection from driver compartment allows easy installation
- Light Engine connections use plenum rated (CMP) cable

OPTICS

- Visually pleasing 50° cutoff to source and source image
- The light distribution is free of distracting bright spots or pixelation and the perimeter has a smooth transition
- Optical grade silicone lens integral to light engine
- High purity spun aluminum reflector, self-flanged
- Flush Mount flange option with mud-in ring available
- Large selection of anodized finishes and colors

OPTICS (CONTINUED)

- Painted cones and flange options available

ELECTRICAL

- Chip-on-board LED with 2 SDCM
- Multiple CCTs, 80+ or 90+ CRI
- Long LED life: L90 at >55,000 hours (TM-21)
- Universal voltage 120V–277V driver, 347V optional
- UL Class 2, inherent short circuit and overload protection, RoHS compliant
- Flicker free 0-10V dimming with 1% or <1% performance
- DALI, DMX, and Lutron Forward Phase and EcoSystem options
- Integral and remote emergency controller and battery pack options available
- NX or Lutron Vive control options available
- Refer to additional spec sheets for information on SpectraSync™ Tunable White or Dim-to-Warm or PowerHUBB™ PoE enabled solutions

INSTALLATION

- Accommodates ceiling thickness up to 2"
- Universal adjustable mounting brackets also accept 0.5" EMT conduit or 1.5" or 0.75" lathing channel (by others) or Prescolite accessory bar hangers (B24 or B6)
- Light Engine/Driver fully serviceable from above or below the ceiling

CERTIFICATIONS

- cCSAus certified to UL 1598
- Suitable for wet locations, covered ceiling
- EM/EMR: Certified under UL 924 standard for emergency lighting and power equipment
- Approved for 8 (4 in/4 out) No. 12AWG conductors rated for 90°C through wiring
- ENERGY STAR® certified models available (See list and additional information on page 7)

WARRANTY

- 5 year warranty
- See HLI Standard Warranty for additional information

KEY DATA	
Lumen Range	600-4000
Wattage Range	8-52
Efficacy Range (LPW)	90-99*
Reported Life (Hours)	L90 / >55,000
Input Current (mA)	65-433 (120V)

*Based on Specular, 35K, 80 CRI

© 2019 Prescolite, a division of Hubbell Lighting, Inc. Specifications subject to change without notice.
701 Millennium Blvd • Greenville, SC 29607 / Tel 864.678.1000 / Website www.prescolite.com

HUBBELL Lighting

prescolite

LTR-4RD

LITEISTRY 4" ROUND DOWNLIGHT

DATE:	LOCATION:
TYPE:	PROJECT:
CATALOG #:	

ORDERING GUIDE

Example: LTR–4RD–H–SL10L–DM1–LTR–4RD–T–SL35K8MDS

CATALOG # LTR-4RD-H-SL10L-DM1- LTR-4RD-T-SL40K8MDS

HOUSING

LTR-4RD-H –

Aperture/Shape/Function	
LTR-4RD-H	4" Round Downlight New Construction Housing
LTR-4RD-RFH	4" Round Downlight Retrofit Housing[1,7]
LTR-4RD-RFHW	4" Round Downlight Retrofit Housing (for Wide Diameter)[1,7]

–

Lumen Package		Lumen Output	
SL	Standard Lumen	**06L**	600
		10L	1000
		15L	1500
ML	Medium Lumen	**20L**	2000
		25L	2500
		30L	3000
HL	High Lumen	**35L**	3500
		40L	4000

–

Driver Options[3]	
DM1	0-10V Dimming to 1%
DM01	0-10V Dimming to < 1%
DMX	DMX with RDM dimming to < 0.1%[3]
DALI	DALI Dimming to 1%
2DM	Lutron Hi-Lume 2-wire Dimming to 1% (120V Forward Phase only)[3]
EDM	Lutron Hi-Lume EcoSystem Dimming to 1%[3]

Control Options	
NXE	NX Enabled, Dual SmartPorts[4]
NXWE	NX Wireless Enabled[4]
NXWD	NX Wireless Enabled, Dual SmartPorts[4]
LV	Lutron Vive Enabled, 0-10V (requires 0-10V driver)
LVE	Lutron Vive Enabled, EcoSystem, (requires EDM)

Voltage	
Standard 120-277V	
34	347V[8]

–

Housing Options[11]	
CP	Chicago Plenum[9]
IC	IC rated[10]
EM	Emergency Battery Pack with integral test switch and indicator light
EMR	Emergency Battery Pack with remote test switch and indicator light
DTS	Device Transfer Switch
GTD	Generator Transfer Device
F	Fuse

TRIM

LTR-4RD-T –

Aperture/Shape/Function	
LTR-4RD-T	4" Round Downlight Light Engine/Trim Assembly

Lumen Package	
SL	Standard Lumen
ML	Medium Lumen
HL	High Lumen

CCT	
27K	2700K
30K	3000K
35K	3500K
40K	4000K
50K	5000K[2]

CRI	
8	80+CRI
9	90+CRI

Distribution	
NR	Narrow (0.4 SC)
MD	Medium (0.7 SC)
WD	Wide (0.9 SC)
XW	Extra Wide (1.2 SC)

TRIM CONTINUED

–

Reflector Finish	
Finish not applicable with painted reflectors (WC or BC)	
S	Specular
SS	Semi-Specular
MFC	American Matte™
VS	Softglow®
VSS	SoftSheen™

Reflector Color	
Standard Clear	
CG	Champagne Gold
BL	Black
LW	Light Wheat
PW	Pewter
WC	Painted White Cone and Flange
BC	Painted Black Cone and Flange

Flange Color Options	
Standard matches reflector color	
WT	White Flange[5]
BT	Black Flange[5]

Lower Trim Options	
EM	Pre-punched reflector for EM integral test switch and indicator
FM	Flush Mount Mud-in Ring[12]
WF	Wide Flange

Reflector Options	
AM	Antimicrobial Coating[6]

Accessories	
☐ **B24**	Set of two (2) 24" bar hangers for T-bar ceilings[13]
☐ **B6**	Set of two bar hangers for ceiling joist up to 24" centers[13]
☐ **FMR4-R**	Flush Mount Mud-In Ring Accessory, 4" Round
☐ **LiteGear**	LiteGear® Inverter, 125VA-250VA
☐ **LPS Series**	LightPower Micro-Inverter, 20VA-55VA

Notes:

1. RFH and RFHW available up to 30L; not available with Controls or Housing options.
2. 5000K available in 80+ CRI only.
3. 2DM, EDM, DMX available in 10L-35L.
4. NX requires DM1 driver option.
5. WT not needed for WC, BT not needed for BC.
6. Clear reflector or WC only, consult factory for other colors.
7. See line art for compatibility with existing aperture diameters.
8. 347V requires DM1 driver option; not available in 06L or with Controls F, DTS, GTD, EM, EMR.
9. CP available up to 20L; not available with DMX, Controls, or EMR options.
10. IC available up to 20L; not available with Controls options.
11. Housing options (except Fuse) not available in combination.
12. Flush Mount Flange (FM) requires FMR accessory (sold separately).
13. Not for use with Retrofit housings (RFH/RFHW).

© 2019 Prescolite, a division of Hubbell Lighting, Inc. Specifications subject to change without notice.
701 Millennium Blvd • Greenville, SC 29607 / Tel 864.678.1000 / Website www.prescolite.com

HUBBELL Lighting

prescolite

LTR-4RD

LITEISTRY 4" ROUND DOWNLIGHT

DATE: LOCATION:

TYPE: PROJECT:

CATALOG #:

CONTROLS

NX Distributed Intelligence™ Lighting Controls:
Supports applications in a variety of deployment options- wired, wireless, hybrid. Integrates with and enables a wide array of luminaires including those with SpectraSync™ Color Tuning Technology.

NX DISTRIBUTED™ INTELLIGENCE

NX INTEGRATED CONTROLS REFERENCE								
NX Option	Sensor	Networkable	Scheduling	Occupancy	Daylight Harvesting	0–10V Dimming	On/off Control	Bluetooth® App Programming
NX Networked – Wired								
NXE	N/A	Yes	Yes	No	No	Yes	Yes	Requires NXBTC/R[1]
NX Networked – Wireless								
NXWE[2]	N/A	Yes	Yes	No	No	Yes	Yes	No[3]
NX Networked – Wired/Wireless								
NXWD	N/A	Yes	Yes	No	No	Yes	Yes	Requires NXBTC/R[1,3]

1 NXBTC/R needs to be plugged into an available NX SmartPort™ on the fixture network
2 Programming via App requires factory assistance
3 To program NXWE option, need to consult factory. If connected to an area controller, programming can be done from that

DIMENSIONS

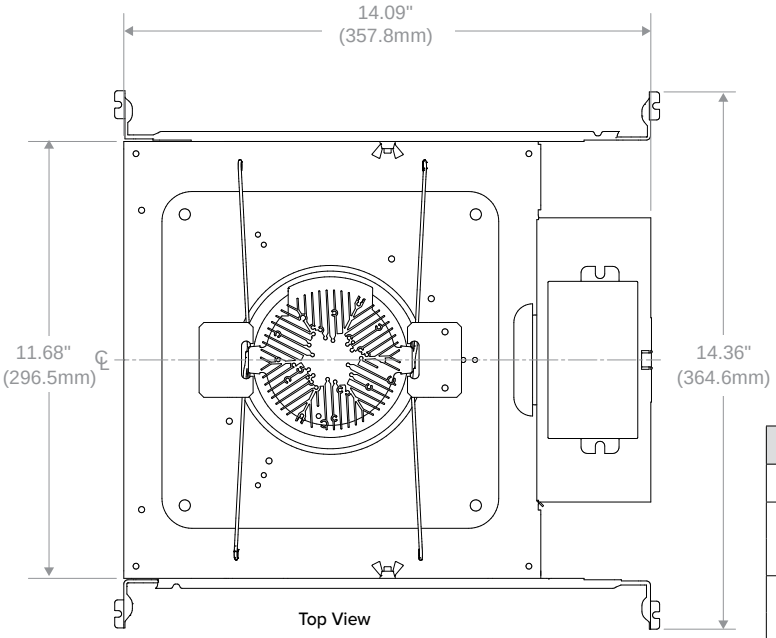

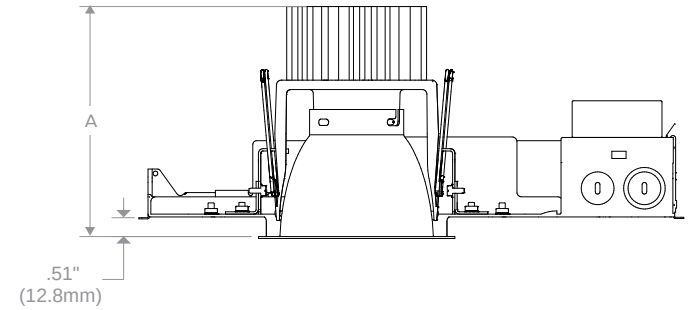

Dimensional Data		
Aperture		4.00" (101.6mm)
Flange:	Standard	5.25" (133.4mm)
	Flush Mount	4.50" (114.3mm)
Ceiling Cutout:	Standard	5.00" (127.0mm)
	Flush Mount	5.12" (130.0mm)
Ceiling Thickness:		0.50" to 2.00" (12.7mm to 50.8mm)

Lumen Package	"A"
06L-15L	4.97" (126.2mm)
20L-30L	6.15" (156.2mm)
35L-40L	7.33" (186.2mm)

LTR-4RD-H New Construction

© 2019 Prescolite, a division of Hubbell Lighting, Inc. Specifications subject to change without notice.
701 Millennium Blvd • Greenville, SC 29607 / Tel 864.678.1000 / Website www.prescolite.com

HUBBELL Lighting

prescolite

LTR-4RD

LITEISTRY 4" ROUND DOWNLIGHT

DATE:	LOCATION:
TYPE:	PROJECT:
CATALOG #:	

DIMENSIONS CONTINUED

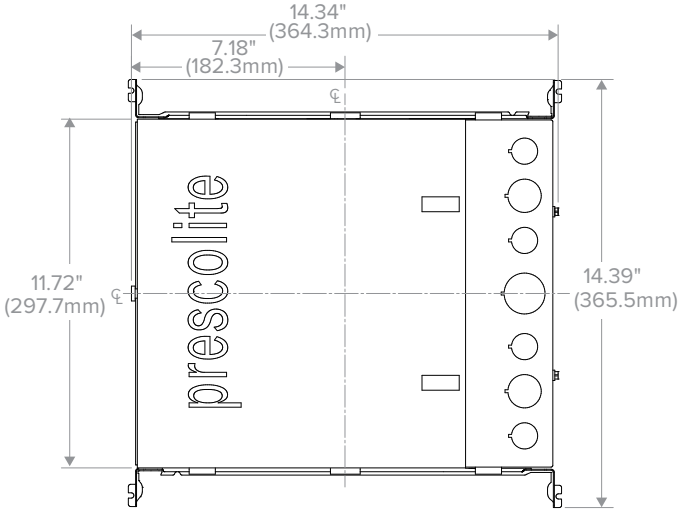

Top View

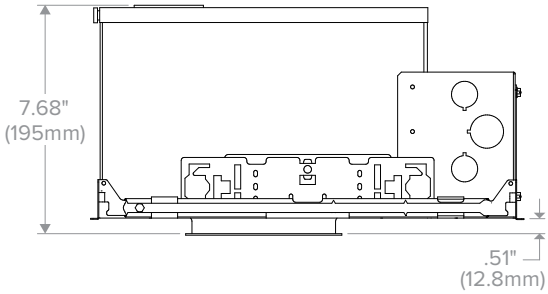

Dimensional Data		
Aperture		4.00" (101.6mm)
Flange:	Standard	5.25" (133.4mm)
	Flush Mount	4.50" (114.3mm)
Ceiling Cutout:	Standard	5.00" (127.0mm)
	Flush Mount	5.12" (130.0mm)
Ceiling Thickness:		0.50" to 2.00" (12.7mm to 50.8mm)

LTR-4RD-H IC/CP

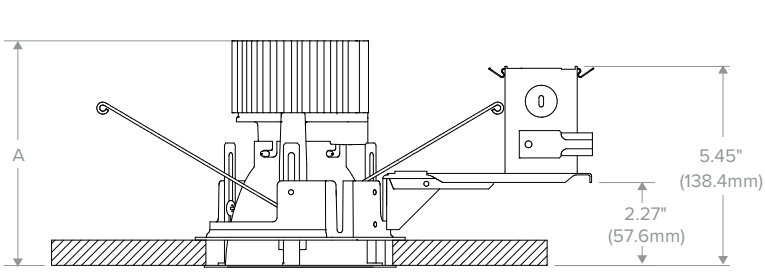

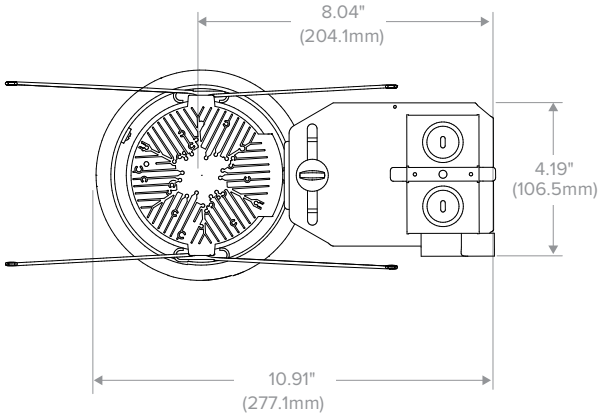

Top View

Housing Compatibility Guide			
Existing Frame Opening**		Use Housing	Use Flange Option
MIN	MAX		
4.75" (120.7mm)	5.00" (127.0mm)	-RFH	(Standard)
5.00" (127.0mm)	5.50" (139.7mm)	-RFHW	WF

**Measure the existing plaster frame opening at its narrowest point

Dimensional Data		
Aperture		4.00" (101.6mm)
Flange:	Standard	5.25" (133.4mm)
	Flush Mount	4.50" (114.3mm)
	Wide (WF)	5.75" (146.1mm)
Ceiling Cutout:	Standard	5.00" (127.0mm)
	Flush Mount	5.12" (130.0mm)
Ceiling Thickness:		0.50" to 2.00" (12.7mm to 50.8mm)

Lumen Package	"A"
06L-15L	4.97" (126.2mm)
20L-30L	6.15" (156.2mm)

LTR-4RD-RFH/-RFHW

© 2019 Prescolite, a division of Hubbell Lighting, Inc. Specifications subject to change without notice.
701 Millennium Blvd • Greenville, SC 29607 / Tel 864.678.1000 / Website www.prescolite.com

HUBBELL Lighting

prescolite

LTR-4RD

LITEISTRY 4" ROUND DOWNLIGHT

DATE: LOCATION:

TYPE: PROJECT:

CATALOG #:

PHOTOMETRY

LTR-4RD-H-ML20L-DM1 / LTR-4RD-T-ML35K8NRS

LUMINAIRE DATA

Test No.	**19.00532**
Description	**2000 lm, Narrow, 3500K, 80 CRI**
Delivered Lumens	**2238**
Watts	**22.5W**
Efficacy	**99.3**
Mounting	**Recessed**
Spacing Criterion	**0.4**
Beam Angle (FWHM)	**29**

ZONAL LUMEN SUMMARY

Zone	Lumens	% Luminaire
0-40	2208	98.6
0-60	2237	99.9
0-90	2238	100.0
0-180	2238	100.0

POLAR GRAPH

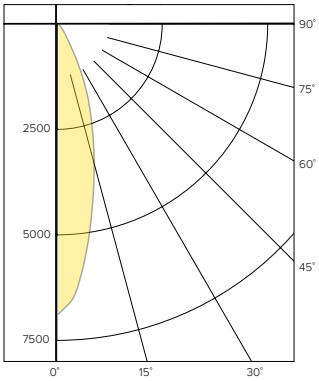

CANDELA DISTRIBUTION

Degree	Candela
0	6877
5	6035
15	3284
25	1313
35	260
45	26
55	3
65	1
75	0
85	0
90	0

LUMINANCE DATA*

Vertical Angle	Average
45°	4535
55°	645
65°	292
75°	0
85°	0

*Candela/Square Meter

IES FILE

LTR-4RD-H-ML20L-DM1 / LTR-4RD-T-ML35K8MDS

LUMINAIRE DATA

Test No.	**19.00533**
Description	**2000 lm, Medium, 3500K, 80 CRI**
Delivered Lumens	**2152**
Watts	**22.5W**
Efficacy	**95.6**
Mounting	**Recessed**
Spacing Criterion	**0.7**
Beam Angle (FWHM)	**44**

ZONAL LUMEN SUMMARY

Zone	Lumens	% Luminaire
0-40	2113	98.2
0-60	2151	99.9
0-90	2152	100.0
0-180	2152	100.0

POLAR GRAPH

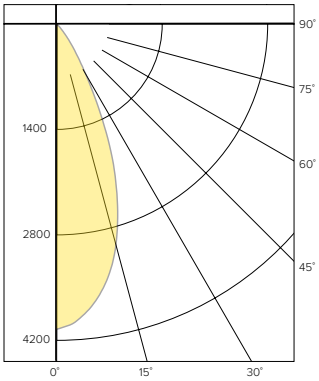

CANDELA DISTRIBUTION

Degree	Candela
0	4053
5	3893
15	3037
25	1493
35	366
45	34
55	3
65	1
75	0
85	0
90	0

LUMINANCE DATA*

Vertical Angle	Average
45°	5931
55°	645
65°	292
75°	0
85°	0

*Candela/Square Meter

IES FILE

LTR-4RD-H-ML20L-DM1 / LTR-4RD-T-ML35K8WDS

LUMINAIRE DATA

Test No.	**19.00534**
Description	**2000 lm, Wide, 3500K, 80 CRI**
Delivered Lumens	**2059**
Watts	**22.5W**
Efficacy	**91.6**
Mounting	**Recessed**
Spacing Criterion	**0.9**
Beam Angle (FWHM)	**61**

ZONAL LUMEN SUMMARY

Zone	Lumens	% Luminaire
0-40	1983	96.3
0-60	2056	99.8
0-90	2059	100.0
0-180	2059	100.0

POLAR GRAPH

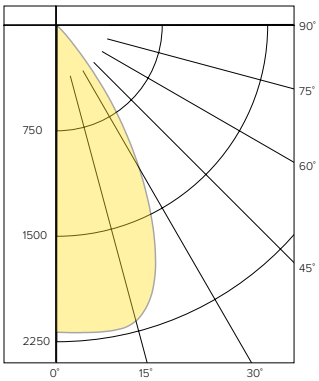

CANDELA DISTRIBUTION

Degree	Candela
0	2201
5	2210
15	2051
25	1504
35	692
45	169
55	10
65	3
75	1
85	0
90	0

LUMINANCE DATA*

Vertical Angle	Average
45°	11338
55°	1075
65°	584
75°	477
85°	0

*Candela/Square Meter

IES FILE

© 2019 Prescolite, a division of Hubbell Lighting, Inc. Specifications subject to change without notice.
701 Millennium Blvd • Greenville, SC 29607 / Tel 864.678.1000 / Website www.prescolite.com

HUBBELL Lighting

prescolite

LTR-4RD

LITEISTRY 4" ROUND DOWNLIGHT

DATE: LOCATION:

TYPE: PROJECT:

CATALOG #:

PHOTOMETRY CONTINUED

LTR-4RD-H-ML20L-DM1 / LTR-4RD-T-ML35K8XWS

LUMINAIRE DATA

Test No.	**19.00535**
Description	**2000 lm, Extra Wide, 3500K, 80 CRI**
Delivered Lumens	**2028**
Watts	**22.5W**
Efficacy	**90.2**
Mounting	**Recessed**
Spacing Criterion	**1.2**
Beam Angle (FWHM)	**78**

ZONAL LUMEN SUMMARY

Zone	Lumens	% Luminaire
0-40	1794	88.5
0-60	2025	99.8
0-90	2028	100.0
0-180	2028	100.0

POLAR GRAPH

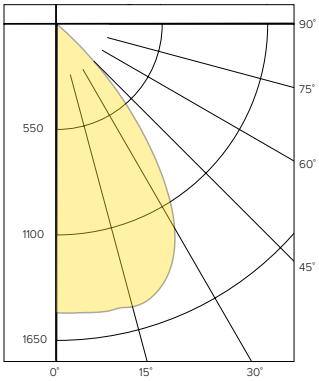

CANDELA DISTRIBUTION

Degree	Candela
0	1235
5	1252
15	1392
25	1454
35	1010
45	256
55	6
65	2
75	1
85	0
90	0

LUMINANCE DATA*

Vertical Angle	Average
45°	44656
55°	1290
65°	584
75°	231
85°	477

*Candela/Square Meter

LUMEN MULTIPLIER

Option	27K8	30K8	35K8	40K8	50K8	27K9	30K9	35K9	40K9
Multiplier	0.94	0.98	1.00	1.01	1.02	0.81	0.84	0.85	0.85

Photometrics are published below at a nominal 3500 Kelvin, 80+ CRI. This table may be used to approximate the lumen values at different Kelvin temperatures. Power consumption would stay the same.

TM-30 DATA

COLOR VECTOR GRAPHIC 3500K, 90 CRI

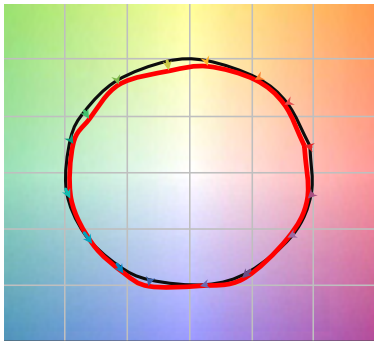

Reference Illuminant — Test Source

COLOR DISTORTION GRAPHIC 3500K, 90 CRI

TEST RESULTS - 3500K		
Value	80+ CRI	90+ CRI
R_f	84	88
R_g	95	95
CCT (K)	3411	3419
D_{UV}	0.0015	0.0042
x	0.4120	0.4147
y	0.3974	0.4052
CIE R_a	84	93
CIE R_g	11	62

COLOR VECTOR GRAPHIC 3500K, 80 CRI

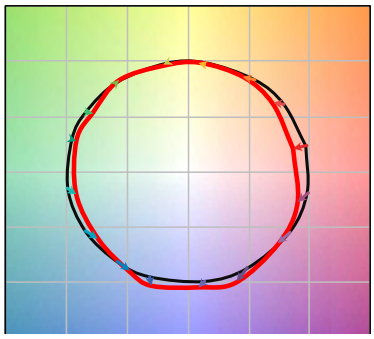

Reference Illuminant — Test Source

COLOR DISTORTION GRAPHIC 3500K, 80 CRI

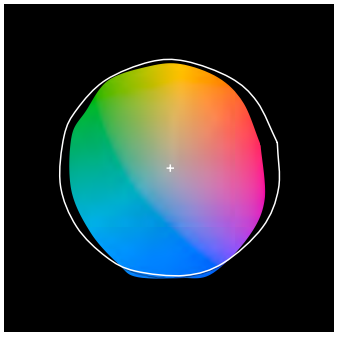

IES FILE

© 2019 Prescolite, a division of Hubbell Lighting, Inc. Specifications subject to change without notice.
701 Millennium Blvd • Greenville, SC 29607 / Tel 864.678.1000 / Website www.prescolite.com

HUBBELL Lighting

prescolite

LTR-4RD

LITEISTRY 4" ROUND DOWNLIGHT

DATE:	LOCATION:
TYPE:	PROJECT:
CATALOG #:	

ELECTRICAL DATA

DRIVER DATA		
Input Voltage	120-277 V	347 V
Input Frequency	50/60 Hz	50/60 Hz
Power Factor	≥0.90	≥0.90
THD	<20%	<20%
EMI Filtering (FCC 47 CFR Part 15)	Class A	Class A

* Values for DM1 option shown, values for other dimming options may vary.

WATTAGE DATA		
Lumen Output	Nominal Lumens	Wattage
06L	600	8
10L	1000	12
15L	1500	19
20L	2000	23
25L	2500	28
30L	3000	35
35L	3500	43
40L	4000	52

* Wattage may vary based on configuration and options selected

ADDITIONAL INFORMATION

DIMMING COMPATIBILITY CHART		
Dimming Driver	Manufacturer	Web Link
DM1 /DM01	Lutron DVTV	http://bit.ly/11jSvZg
DM1	Leviton AWRMG-7xx, AWSMG-7xx, AWSMT-7xx	http://bit.ly/1BJn2R9
EDM	Lutron	http://bit.ly/1vtjHAl
2DM	Lutron	http://bit.ly/1S4WjXK

DMX

See instruction sheet on www.prescolite.com for connection & installation information.

Central Inverters

For full fixture output in back-up mode, we recommend you visit www.dual-lite.com for your Central Lighting Inverter options. Please contact your local Hubbell representative for any assistance with proper sizing and loading of your inverter selection. Central lighting inverters must be ordered separately.
LiteGear: www.dual-lite.com/products/litegear_lg_series
LPS Series: www.dual-lite.com/products/lps

ENERGY STAR®

The following stock items are ENERGY STAR® certified models. (See www.energystar.gov for more details.)

ENERGY STAR® Certified Models
LTR-4RD-H-SL10L-DM1 + LTR-4RD-T-SL35K8WDSS
LTR-4RD-H-SL10L-DM1 + LTR-4RD-T-SL35K8WDSSWT
LTR-4RD-H-SL15L-DM1 + LTR-4RD-T-SL35K8WDSS
LTR-4RD-H-SL15L-DM1 + LTR-4RD-T-SL35K8WDSSWT
LTR-4RD-H-ML20L-DM1 + LTR-4RD-T-ML35K8WDSS
LTR-4RD-H-ML20L-DM1 + LTR-4RD-T-ML35K8WDSSWT
LTR-4RD-H-ML30L-DM1 + LTR-4RD-T-ML35K8WDSS
LTR-4RD-H-ML30L-DM1 + LTR-4RD-T-ML35K8WDSSWT
LTR-4RD-H-HL40L-DM1 + LTR-4RD-T-HL35K8WDSS
LTR-4RD-H-HL40L-DM1 + LTR-4RD-T-HL35K8WDSSWT

All product and company names, logos and product identifiers are trademarks ™ or registered trademarks ® of Hubbell Lighting, Inc. or their respective owners. Use of them does not necessarily imply any affiliation with or endorsement by such respective owners.

© 2019 Prescolite, a division of Hubbell Lighting, Inc. Specifications subject to change without notice.
701 Millennium Blvd • Greenville, SC 29607 / Tel 864.678.1000 / Website www.prescolite.com

HUBBELL Lighting

HMWP-UDQ DuraLED Halfmoon Up/Down Light

DuraGuard PRODUCTS INC® A QSSI Company

5

Project Information

Project Name:	Fixture Type:
Complete Catalog #:	Date:
Comments:	

The DuraGuard HMWP-UDQ up and down architectural wall luminaire is available with an IES Type V distribution designed to replace HID lighting systems from 150w to 250w MH or HPS. Typical wall mounted lighting applications include retail centers, industrial parks, schools and universities, public transit and airports, office buildings and medical facilities. Mounting heights of 12 to 20 feet can be used based on light level and uniformity requirements.

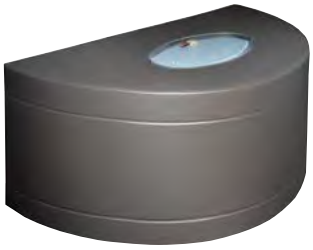

(Top View)

(Bottom View)

Specifications and Features:

L70 25°C — 410,000 Hours

Housing:
Die Cast Gasketed Aluminum Front Frame and Housing. Nickel-Plated Stainless Steel Hardware.

Listing & Ratings:
CSA: Listed for Wet Locations, ANSI/UL 1598, 8750 IP65 Sealed LED Compartment.

Finish:
Textured Architectural Bronze Powdercoat Finish Over a Chromate Conversion Coating. Custom Colors Available Upon Request.

Lens:
Bottom: Tempered Clear Flat Glass Lens,
Top: Oval Molded Tempered Clear Glass Lens

Mounting Options:
Mount Directly Over a 4″ Recessed Outlet Box, Includes Easy-Hang "Two Hands Free" Wall Mounting Bracket with Built-In Level.

DuraLED LED:
Aluminum Boards

Wattage:
Array:12w and 34w, System: 52w
(250w HID Equivalent)

Driver:
Electronic Driver, 120-277V, 50/60Hz or 347V, 50/60Hz; Less Than 20% THD and PF>0.90. Standard Internal Surge Protection 6kV. 0-10V Dimming Standard for a Dimming Range of 100% to 10%; Dimming Source Current is 150 Microamps.

Warranty:
5-Year Warranty for -40°C to +40°C Environment.

See Page 2 for Projected Lumen Maintenance Table.

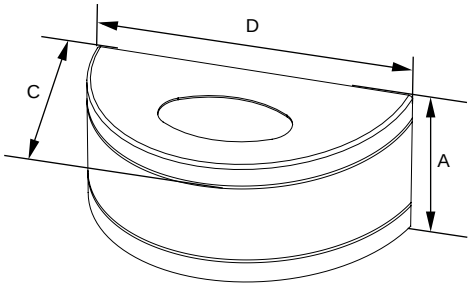

Dimensions	
Width (D)	18⅛″ (460mm)
Depth (C)	7⅛″ (181mm)
Height (A)	9⅛″ (232mm)

DuraLED Technology

Complete Units
Ordering Information
Example: HMWP-UDQF1X46U5KZSP

HMWP-UDQ DuraLED Halfmoon Up/Down Light

HMWP-UDQ	F	1X46				
Model	**Optics**	**Wattage**	**Driver**	**CCT**	**Color**	**Options**
HMWP-UDQ= DuraLED Halfmoon Up/Down Light	F=Type V	1X46= Up 1x12w, Down 1x34	U=120-277V C=347V	4K=4000K 5K=5000K	Z=Bronze C=Custom (Consult Factory)	SF=Single Fuse DF=Double Fuse SP=Surge Protection BU=Battery Backup, 90 Minutes

IP65

HMWP-UDQ DuraLED Halfmoon Up/Down Light

DuraGuard PRODUCTS INC® A QSSI Company

Replacement Parts
(Order Separately, Field Installed)

For Replacement Battery Backup, see the DuraGuard LED Battery Backup Specification Sheet.

Photometric Performance

				5000 CCT 80 CRI					4000 CCT 80 CRI				
LED Board Watts	Drive Current (mA)	Input Watts	**Optics**	Lumens	LPW	B	U	G	Lumens	LPW	B	U	G
DuraLED 46w	525	52	Type V	5,922	114	2	5	1	5,419	104	2	5	0

Projected Lumen Maintenance

Data shown for 5000 CCT			Compare to MH			
TM-21-11	Input Watts	Initial	25,000 Hrs	50,000 Hrs	100,000 Hrs	Calculated L70@ 25°C
L70 Lumen Maintenance @ 25°C / 77°F	52	1.00	0.98	0.96	0.93	410,000

TM-21-11	Input Watts	Initial	25,000 Hrs	50,000 Hrs	100,000 Hrs	Calculated L70@ 50°C
L70 Lumen Maintenance @ 50°C / 122°F	52	1.00	0.97	0.94	0.87	235,000

TM-21-11	Input Watts	Initial	25,000 Hrs	50,000 Hrs	100,000 Hrs	Calculated L80@ 40°C
L80 Lumen Maintenance @ 40°C / 104°F	52	1.00	0.97	0.95	0.89	187,000

NOTES:
1. Projected per IESNA TM-21-11. Data references the extrapolated performance projections for the 525mA base model in a 25°C ambient, based on 10,000 hours of LED testing per IESNA LM-80-08.
2. Compare to MH box indicates suggested Light Loss Factor (LLF) to be used when comparing to Metal Halide (MH) systems.

Photometric Data

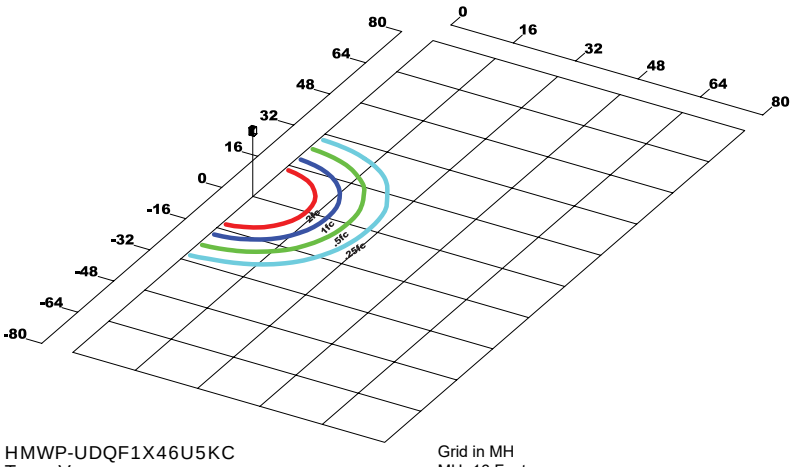

HMWP-UDQF1X46U5KC
Type V

Grid in MH
MH=16 Feet

prescolite

DATE:	LOCATION:
TYPE:	PROJECT:
CATALOG #:	

LTR-4RD

LITEISTRY 4" ROUND DOWNLIGHT

LITEISTRY™

PHOTOMETRY

DIMENSIONAL DRAWINGS

FEATURES

- 4" architectural LED downlight delivering 600 – 4000 lm
- Four beam distributions from 0.4 to 1.2 Spacing Criteria
- Quiet reflector appearance with superior 50° optical cutoff
- 2700K – 5000K, 80+ and 90+ CRI options
- Available for New Construction (non-IC), Retrofit (non-IC), IC and Chicago Plenum applications
- Variety of dimming protocol options including 0–10V, DALI, DMX, Lutron Forward Phase and EcoSystem
- NX Distributed Intelligence™ wired and wireless controls capability available

WET LOCATION

C US

ENERGY STAR

RELATED PRODUCTS

- 3" LITEISTRY Family
- 4" LITEISTRY Family
- 6" LITEISTRY Family

CONTROL TECHNOLOGY

NX DISTRIBUTED™ INTELLIGENCE

SPECIFICATIONS

CONSTRUCTION

- Standard Non-IC. Chicago Plenum, IC and Retrofit options
- New Construction: Painted black durable steel platform with pre-installed bar hangers
- Retrofit: Die cast aluminum mounting ring with 5-axis adjustable junction box
- Retrofit housing allows below ceiling installation without removing existing fixture
- Pre-wired junction box with snap-on covers for easy access
- Snap-in connection from driver compartment allows easy installation
- Light Engine connections use plenum rated (CMP) cable

OPTICS

- Visually pleasing 50° cutoff to source and source image
- The light distribution is free of distracting bright spots or pixelation and the perimeter has a smooth transition
- Optical grade silicone lens integral to light engine
- High purity spun aluminum reflector, self-flanged
- Flush Mount flange option with mud-in ring available
- Large selection of anodized finishes and colors

OPTICS (CONTINUED)

- Painted cones and flange options available

ELECTRICAL

- Chip-on-board LED with 2 SDCM
- Multiple CCTs, 80+ or 90+ CRI
- Long LED life: L90 at >55,000 hours (TM-21)
- Universal voltage 120V–277V driver, 347V optional
- UL Class 2, inherent short circuit and overload protection, RoHS compliant
- Flicker free 0-10V dimming with 1% or <1% performance
- DALI, DMX, and Lutron Forward Phase and EcoSystem options
- Integral and remote emergency controller and battery pack options available
- NX or Lutron Vive control options available
- Refer to additional spec sheets for information on SpectraSync™ Tunable White or Dim-to-Warm or PowerHUBB™ PoE enabled solutions

INSTALLATION

- Accommodates ceiling thickness up to 2"
- Universal adjustable mounting brackets also accept 0.5" EMT conduit or 1.5" or 0.75" lathing channel (by others) or Prescolite accessory bar hangers (B24 or B6)
- Light Engine/Driver fully serviceable from above or below the ceiling

CERTIFICATIONS

- cCSAus certified to UL 1598
- Suitable for wet locations, covered ceiling
- EM/EMR: Certified under UL 924 standard for emergency lighting and power equipment
- Approved for 8 (4 in/4 out) No. 12AWG conductors rated for 90°C through wiring
- ENERGY STAR® certified models available (See list and additional information on page 7)

WARRANTY

- 5 year warranty
- See HLI Standard Warranty for additional information

KEY DATA	
Lumen Range	600-4000
Wattage Range	8-52
Efficacy Range (LPW)	90-99*
Reported Life (Hours)	L90 / >55,000
Input Current (mA)	65-433 (120V)

*Based on Specular, 35K, 80 CRI

© 2019 Prescolite, a division of Hubbell Lighting, Inc. Specifications subject to change without notice.
701 Millennium Blvd • Greenville, SC 29607 / Tel 864.678.1000 / Website www.prescolite.com

HUBBELL Lighting

prescolite

LTR-4RD

LITEISTRY 4" ROUND DOWNLIGHT

DATE:	LOCATION:
TYPE:	PROJECT:
CATALOG #:	

ORDERING GUIDE

Example: LTR–4RD–H–SL10L–DM1–LTR–4RD–T–SL35K8MDS

CATALOG # LTR-4RD-H-ML30L-DM1- LTR-4RD-T-ML40K8WDS

HOUSING

LTR-4RD-H –

Aperture/Shape/Function	
LTR-4RD-H	4" Round Downlight New Construction Housing
LTR-4RD-RFH	4" Round Downlight Retrofit Housing[1,7]
LTR-4RD-RFHW	4" Round Downlight Retrofit Housing (for Wide Diameter)[1,7]

Lumen Package		Lumen Output	
SL	Standard Lumen	**06L**	600
		10L	1000
		15L	1500
ML	Medium Lumen	**20L**	2000
		25L	2500
		30L	3000
HL	High Lumen	**35L**	3500
		40L	4000

–

Driver Options[3]	
DM1	0-10V Dimming to 1%
DM01	0-10V Dimming to < 1%
DMX	DMX with RDM dimming to < 0.1%[3]
DALI	DALI Dimming to 1%
2DM	Lutron Hi-Lume 2-wire Dimming to 1% (120V Forward Phase only)[3]
EDM	Lutron Hi-Lume EcoSystem Dimming to 1%[3]

Control Options	
NXE	NX Enabled, Dual SmartPorts[4]
NXWE	NX Wireless Enabled[4]
NXWD	NX Wireless Enabled, Dual SmartPorts[4]
LV	Lutron Vive Enabled, 0-10V (requires 0-10V driver)
LVE	Lutron Vive Enabled, EcoSystem, (requires EDM)

Voltage	
Standard 120-277V	
34	347V[8]

Housing Options[11]	
CP	Chicago Plenum[9]
IC	IC rated[10]
EM	Emergency Battery Pack with integral test switch and indicator light
EMR	Emergency Battery Pack with remote test switch and indicator light
DTS	Device Transfer Switch
GTD	Generator Transfer Device
F	Fuse

–

TRIM

LTR-4RD-T –

Aperture/Shape/Function	
LTR-4RD-T	4" Round Downlight Light Engine/Trim Assembly

Lumen Package	
SL	Standard Lumen
ML	Medium Lumen
HL	High Lumen

CCT	
27K	2700K
30K	3000K
35K	3500K
40K	4000K
50K	5000K[2]

CRI	
8	80+CRI
9	90+CRI

Distribution	
NR	Narrow (0.4 SC)
MD	Medium (0.7 SC)
WD	Wide (0.9 SC)
XW	Extra Wide (1.2 SC)

TRIM CONTINUED

–

Reflector Finish	
Finish not applicable with painted reflectors (WC or BC)	
S	Specular
SS	Semi-Specular
MFC	American Matte™
VS	Softglow®
VSS	SoftSheen™

Reflector Color	
Standard Clear	
CG	Champagne Gold
BL	Black
LW	Light Wheat
PW	Pewter
WC	Painted White Cone and Flange
BC	Painted Black Cone and Flange

Flange Color Options	
Standard matches reflector color	
WT	White Flange[5]
BT	Black Flange[5]

Lower Trim Options	
EM	Pre-punched reflector for EM integral test switch and indicator
FM	Flush Mount Mud-in Ring[12]
WF	Wide Flange

Reflector Options	
AM	Antimicrobial Coating[6]

Accessories	
☐ **B24**	Set of two (2) 24" bar hangers for T-bar ceilings[13]
☐ **B6**	Set of two bar hangers for ceiling joist up to 24" centers[13]
☐ **FMR4-R**	Flush Mount Mud-In Ring Accessory, 4" Round
☐ **LiteGear**	LiteGear® Inverter, 125VA-250VA
☐ **LPS Series**	LightPower Micro-Inverter, 20VA-55VA

Notes:

1. RFH and RFHW available up to 30L; not available with Controls or Housing options.
2. 5000K available in 80+ CRI only.
3. 2DM, EDM, DMX available in 10L-35L.
4. NX requires DM1 driver option.
5. WT not needed for WC, BT not needed for BC.
6. Clear reflector or WC only, consult factory for other colors.
7. See line art for compatibility with existing aperture diameters.
8. 347V requires DM1 driver option; not available in 06L or with Controls F, DTS, GTD, EM, EMR.
9. CP available up to 20L; not available with DMX, Controls, or EMR options.
10. IC available up to 20L; not available with Controls options.
11. Housing options (except Fuse) not available in combination.
12. Flush Mount Flange (FM) requires FMR accessory (sold separately).
13. Not for use with Retrofit housings (RFH/RFHW).

© 2019 Prescolite, a division of Hubbell Lighting, Inc. Specifications subject to change without notice.
701 Millennium Blvd • Greenville, SC 29607 / Tel 864.678.1000 / Website www.prescolite.com

HUBBELL Lighting

prescolite

LTR-4RD

LITEISTRY 4" ROUND DOWNLIGHT

DATE: LOCATION:

TYPE: PROJECT:

CATALOG #:

CONTROLS

NX Distributed Intelligence™ Lighting Controls:
Supports applications in a variety of deployment options- wired, wireless, hybrid. Integrates with and enables a wide array of luminaires including those with SpectraSync™ Color Tuning Technology.

NX DISTRIBUTED™ INTELLIGENCE

NX INTEGRATED CONTROLS REFERENCE								
NX Option	Sensor	Networkable	Scheduling	Occupancy	Daylight Harvesting	0–10V Dimming	On/off Control	Bluetooth® App Programming
NX Networked – Wired								
NXE	N/A	Yes	Yes	No	No	Yes	Yes	Requires NXBTC/R[1]
NX Networked – Wireless								
NXWE[2]	N/A	Yes	Yes	No	No	Yes	Yes	No[3]
NX Networked – Wired/Wireless								
NXWD	N/A	Yes	Yes	No	No	Yes	Yes	Requires NXBTC/R[1,3]

1 NXBTC/R needs to be plugged into an available NX SmartPort™ on the fixture network
2 Programming via App requires factory assistance
3 To program NXWE option, need to consult factory. If connected to an area controller, programming can be done from that

DIMENSIONS

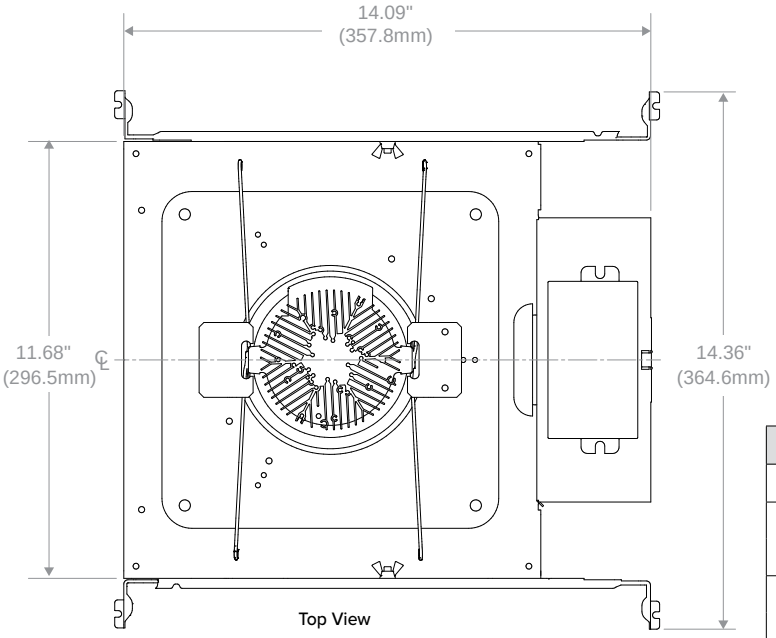

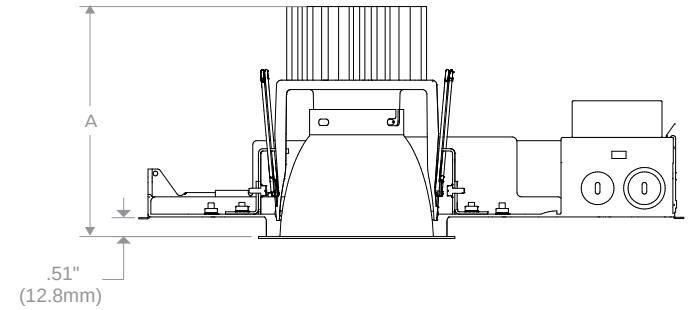

Dimensional Data		
Aperture		4.00" (101.6mm)
Flange:	Standard	5.25" (133.4mm)
	Flush Mount	4.50" (114.3mm)
Ceiling Cutout:	Standard	5.00" (127.0mm)
	Flush Mount	5.12" (130.0mm)
Ceiling Thickness:		0.50" to 2.00" (12.7mm to 50.8mm)

Lumen Package	"A"
06L-15L	4.97" (126.2mm)
20L-30L	6.15" (156.2mm)
35L-40L	7.33" (186.2mm)

LTR-4RD-H New Construction

© 2019 Prescolite, a division of Hubbell Lighting, Inc. Specifications subject to change without notice.
701 Millennium Blvd • Greenville, SC 29607 / Tel 864.678.1000 / Website www.prescolite.com

HUBBELL Lighting

prescolite

LTR-4RD

LITEISTRY 4" ROUND DOWNLIGHT

DATE:	LOCATION:
TYPE:	PROJECT:
CATALOG #:	

DIMENSIONS CONTINUED

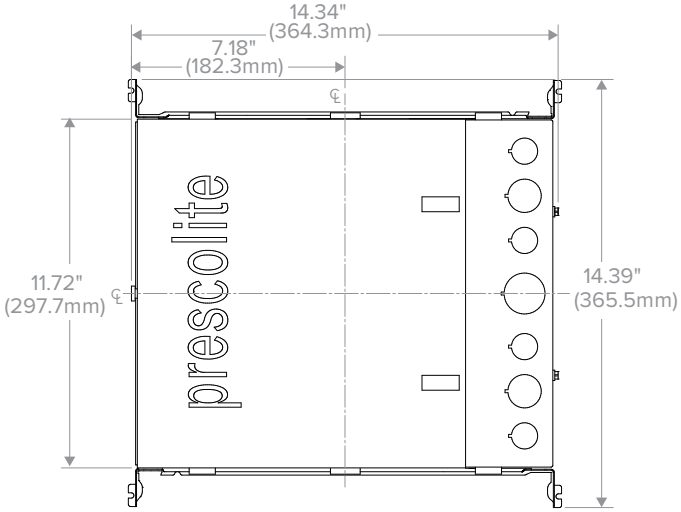

Top View

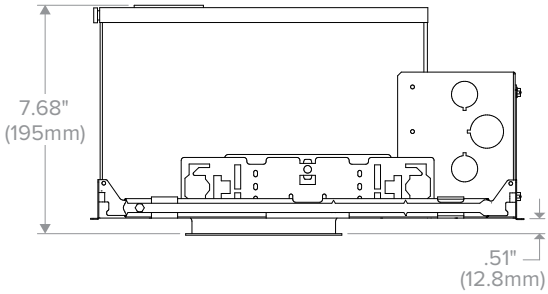

Dimensional Data		
Aperture		4.00" (101.6mm)
Flange:	Standard	5.25" (133.4mm)
	Flush Mount	4.50" (114.3mm)
Ceiling Cutout:	Standard	5.00" (127.0mm)
	Flush Mount	5.12" (130.0mm)
Ceiling Thickness:		0.50" to 2.00" (12.7mm to 50.8mm)

LTR-4RD-H IC/CP

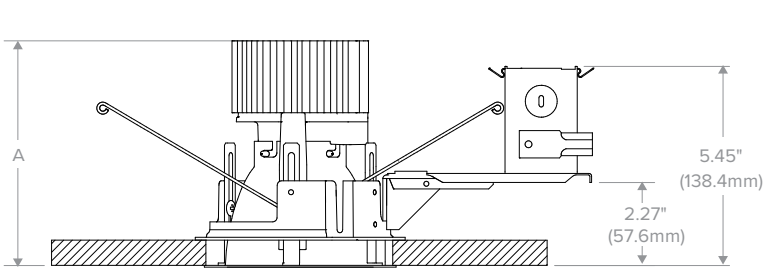

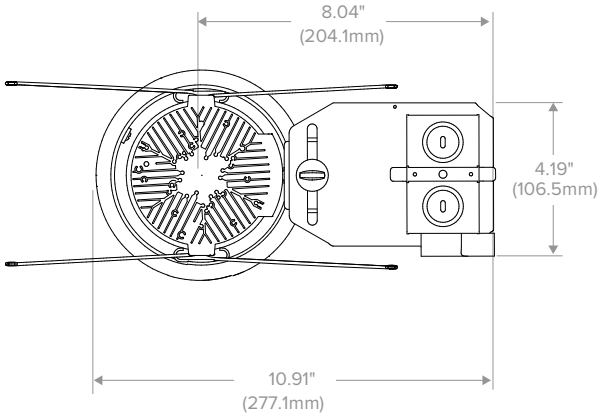

Top View

Housing Compatibility Guide			
Existing Frame Opening**		Use Housing	Use Flange Option
MIN	MAX		
4.75" (120.7mm)	5.00" (127.0mm)	-RFH	(Standard)
5.00" (127.0mm)	5.50" (139.7mm)	-RFHW	WF

**Measure the existing plaster frame opening at its narrowest point

Dimensional Data		
Aperture		4.00" (101.6mm)
Flange:	Standard	5.25" (133.4mm)
	Flush Mount	4.50" (114.3mm)
	Wide (WF)	5.75" (146.1mm)
Ceiling Cutout:	Standard	5.00" (127.0mm)
	Flush Mount	5.12" (130.0mm)
Ceiling Thickness:		0.50" to 2.00" (12.7mm to 50.8mm)

Lumen Package	"A"
06L-15L	4.97" (126.2mm)
20L-30L	6.15" (156.2mm)

LTR-4RD-RFH/-RFHW

© 2019 Prescolite, a division of Hubbell Lighting, Inc. Specifications subject to change without notice.
701 Millennium Blvd • Greenville, SC 29607 / Tel 864.678.1000 / Website www.prescolite.com

HUBBELL Lighting

prescolite

LTR-4RD

LITEISTRY 4" ROUND DOWNLIGHT

DATE: LOCATION:

TYPE: PROJECT:

CATALOG #:

PHOTOMETRY

LTR-4RD-H-ML20L-DM1 / LTR-4RD-T-ML35K8NRS

LUMINAIRE DATA

Test No.	**19.00532**
Description	**2000 lm, Narrow, 3500K, 80 CRI**
Delivered Lumens	**2238**
Watts	**22.5W**
Efficacy	**99.3**
Mounting	**Recessed**
Spacing Criterion	**0.4**
Beam Angle (FWHM)	**29**

ZONAL LUMEN SUMMARY

Zone	Lumens	% Luminaire
0-40	2208	98.6
0-60	2237	99.9
0-90	2238	100.0
0-180	2238	100.0

POLAR GRAPH

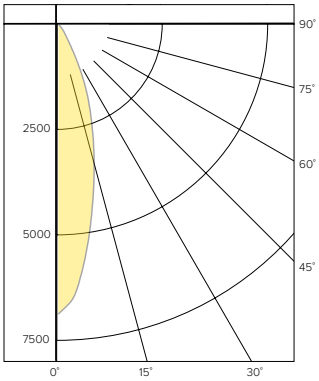

CANDELA DISTRIBUTION

Degree	Candela
0	6877
5	6035
15	3284
25	1313
35	260
45	26
55	3
65	1
75	0
85	0
90	0

LUMINANCE DATA*

Vertical Angle	Average
45°	4535
55°	645
65°	292
75°	0
85°	0

*Candela/Square Meter

IES FILE

LTR-4RD-H-ML20L-DM1 / LTR-4RD-T-ML35K8MDS

LUMINAIRE DATA

Test No.	**19.00533**
Description	**2000 lm, Medium, 3500K, 80 CRI**
Delivered Lumens	**2152**
Watts	**22.5W**
Efficacy	**95.6**
Mounting	**Recessed**
Spacing Criterion	**0.7**
Beam Angle (FWHM)	**44**

ZONAL LUMEN SUMMARY

Zone	Lumens	% Luminaire
0-40	2113	98.2
0-60	2151	99.9
0-90	2152	100.0
0-180	2152	100.0

POLAR GRAPH

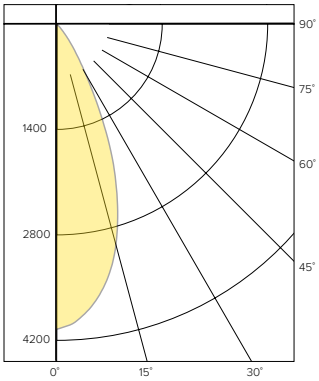

CANDELA DISTRIBUTION

Degree	Candela
0	4053
5	3893
15	3037
25	1493
35	366
45	34
55	3
65	1
75	0
85	0
90	0

LUMINANCE DATA*

Vertical Angle	Average
45°	5931
55°	645
65°	292
75°	0
85°	0

*Candela/Square Meter

IES FILE

LTR-4RD-H-ML20L-DM1 / LTR-4RD-T-ML35K8WDS

LUMINAIRE DATA

Test No.	**19.00534**
Description	**2000 lm, Wide, 3500K, 80 CRI**
Delivered Lumens	**2059**
Watts	**22.5W**
Efficacy	**91.6**
Mounting	**Recessed**
Spacing Criterion	**0.9**
Beam Angle (FWHM)	**61**

ZONAL LUMEN SUMMARY

Zone	Lumens	% Luminaire
0-40	1983	96.3
0-60	2056	99.8
0-90	2059	100.0
0-180	2059	100.0

POLAR GRAPH

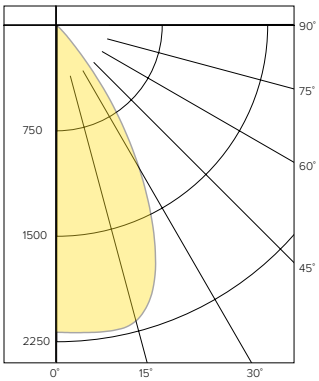

CANDELA DISTRIBUTION

Degree	Candela
0	2201
5	2210
15	2051
25	1504
35	692
45	169
55	10
65	3
75	1
85	0
90	0

LUMINANCE DATA*

Vertical Angle	Average
45°	11338
55°	1075
65°	584
75°	477
85°	0

*Candela/Square Meter

IES FILE

© 2019 Prescolite, a division of Hubbell Lighting, Inc. Specifications subject to change without notice.
701 Millennium Blvd • Greenville, SC 29607 / Tel 864.678.1000 / Website www.prescolite.com

HUBBELL Lighting

prescolite

LTR-4RD

LITEISTRY 4" ROUND DOWNLIGHT

DATE: LOCATION:

TYPE: PROJECT:

CATALOG #:

PHOTOMETRY CONTINUED

LTR-4RD-H-ML20L-DM1 / LTR-4RD-T-ML35K8XWS

LUMINAIRE DATA

Test No.	**19.00535**
Description	**2000 lm, Extra Wide, 3500K, 80 CRI**
Delivered Lumens	**2028**
Watts	**22.5W**
Efficacy	**90.2**
Mounting	**Recessed**
Spacing Criterion	**1.2**
Beam Angle (FWHM)	**78**

ZONAL LUMEN SUMMARY

Zone	Lumens	% Luminaire
0-40	1794	88.5
0-60	2025	99.8
0-90	2028	100.0
0-180	2028	100.0

POLAR GRAPH

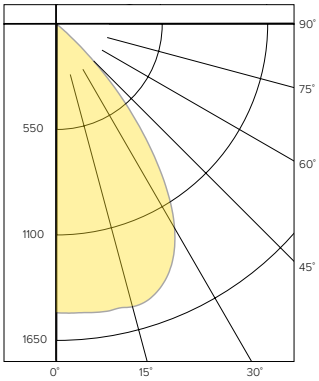

CANDELA DISTRIBUTION

Degree	Candela
0	1235
5	1252
15	1392
25	1454
35	1010
45	256
55	6
65	2
75	1
85	0
90	0

LUMINANCE DATA*

Vertical Angle	Average
45°	44656
55°	1290
65°	584
75°	231
85°	477

*Candela/Square Meter

LUMEN MULTIPLIER

Option	27K8	30K8	35K8	40K8	50K8	27K9	30K9	35K9	40K9
Multiplier	0.94	0.98	1.00	1.01	1.02	0.81	0.84	0.85	0.85

Photometrics are published below at a nominal 3500 Kelvin, 80+ CRI. This table may be used to approximate the lumen values at different Kelvin temperatures. Power consumption would stay the same.

TM-30 DATA

COLOR VECTOR GRAPHIC 3500K, 90 CRI

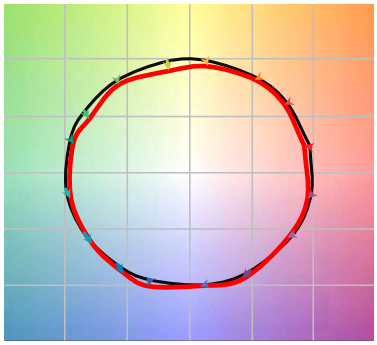

Reference Illuminant — Test Source

COLOR DISTORTION GRAPHIC 3500K, 90 CRI

TEST RESULTS - 3500K		
Value	80+ CRI	90+ CRI
R_f	84	88
R_g	95	95
CCT (K)	3411	3419
D_{UV}	0.0015	0.0042
x	0.4120	0.4147
y	0.3974	0.4052
CIE R_a	84	93
CIE R_g	11	62

COLOR VECTOR GRAPHIC 3500K, 80 CRI

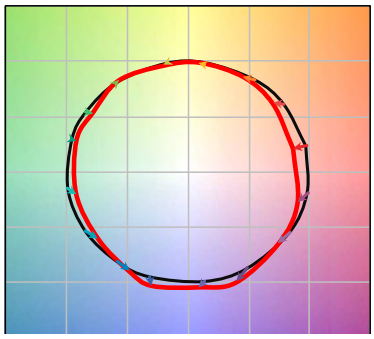

Reference Illuminant — Test Source

COLOR DISTORTION GRAPHIC 3500K, 80 CRI

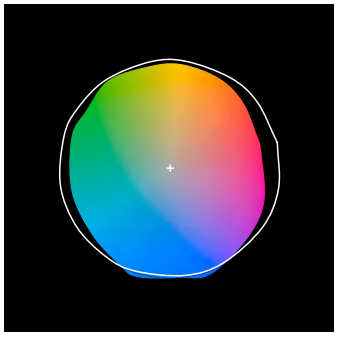

IES FILE

© 2019 Prescolite, a division of Hubbell Lighting, Inc. Specifications subject to change without notice.
701 Millennium Blvd • Greenville, SC 29607 / Tel 864.678.1000 / Website www.prescolite.com

HUBBELL Lighting

prescolite

LTR-4RD

LITEISTRY 4" ROUND DOWNLIGHT

DATE:	LOCATION:
TYPE:	PROJECT:
CATALOG #:	

ELECTRICAL DATA

DRIVER DATA		
Input Voltage	120-277 V	347 V
Input Frequency	50/60 Hz	50/60 Hz
Power Factor	≥0.90	≥0.90
THD	<20%	<20%
EMI Filtering (FCC 47 CFR Part 15)	Class A	Class A

* Values for DM1 option shown, values for other dimming options may vary.

WATTAGE DATA		
Lumen Output	Nominal Lumens	Wattage
06L	600	8
10L	1000	12
15L	1500	19
20L	2000	23
25L	2500	28
30L	3000	35
35L	3500	43
40L	4000	52

* Wattage may vary based on configuration and options selected

ADDITIONAL INFORMATION

DIMMING COMPATIBILITY CHART		
Dimming Driver	Manufacturer	Web Link
DM1 /DM01	Lutron DVTV	http://bit.ly/11jSvZg
DM1	Leviton AWRMG-7xx, AWSMG-7xx, AWSMT-7xx	http://bit.ly/1BJn2R9
EDM	Lutron	http://bit.ly/1vtjHAl
2DM	Lutron	http://bit.ly/1S4WjXK

DMX

See instruction sheet on www.prescolite.com for connection & installation information.

Central Inverters

For full fixture output in back-up mode, we recommend you visit www.dual-lite.com for your Central Lighting Inverter options. Please contact your local Hubbell representative for any assistance with proper sizing and loading of your inverter selection. Central lighting inverters must be ordered separately.
LiteGear: www.dual-lite.com/products/litegear_lg_series
LPS Series: www.dual-lite.com/products/lps

ENERGY STAR®

The following stock items are ENERGY STAR® certified models. (See www.energystar.gov for more details.)

ENERGY STAR® Certified Models
LTR-4RD-H-SL10L-DM1 + LTR-4RD-T-SL35K8WDSS
LTR-4RD-H-SL10L-DM1 + LTR-4RD-T-SL35K8WDSSWT
LTR-4RD-H-SL15L-DM1 + LTR-4RD-T-SL35K8WDSS
LTR-4RD-H-SL15L-DM1 + LTR-4RD-T-SL35K8WDSSWT
LTR-4RD-H-ML20L-DM1 + LTR-4RD-T-ML35K8WDSS
LTR-4RD-H-ML20L-DM1 + LTR-4RD-T-ML35K8WDSSWT
LTR-4RD-H-ML30L-DM1 + LTR-4RD-T-ML35K8WDSS
LTR-4RD-H-ML30L-DM1 + LTR-4RD-T-ML35K8WDSSWT
LTR-4RD-H-HL40L-DM1 + LTR-4RD-T-HL35K8WDSS
LTR-4RD-H-HL40L-DM1 + LTR-4RD-T-HL35K8WDSSWT

All product and company names, logos and product identifiers are trademarks ™ or registered trademarks ® of Hubbell Lighting, Inc. or their respective owners. Use of them does not necessarily imply any affiliation with or endorsement by such respective owners.

© 2019 Prescolite, a division of Hubbell Lighting, Inc. Specifications subject to change without notice.
701 Millennium Blvd • Greenville, SC 29607 / Tel 864.678.1000 / Website www.prescolite.com

HUBBELL Lighting

JOB _____ TYPE _____

NOTES _____ APPROVALS _____

FEATURES

- 20″ size in post top, pole and wall mount
- High performance optics up to 17,000 delivered lumens
- Elegant form factor
- Diffusion lens option
- SiteSync™ wireless control options

CERTIFICATIONS

c UL us LISTED

ida DARK SKY APPROVED 2016

DLC QPL LISTED

3000K and warmer CCTs only

SPECIFICATIONS

Weight: 35 lbs

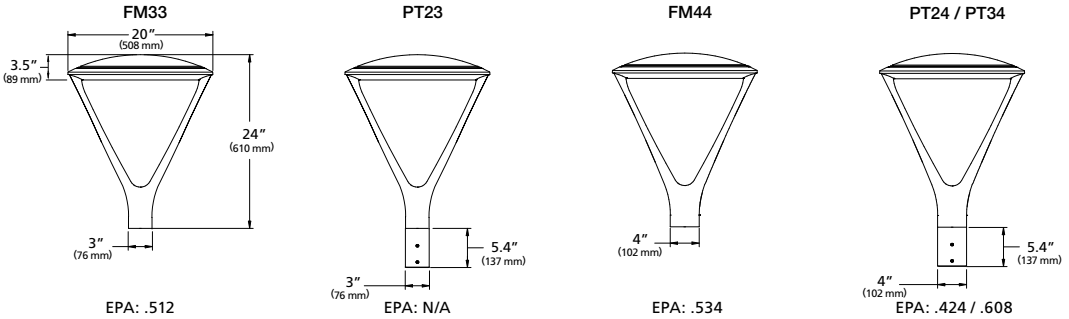

EPA: .512 | EPA: N/A | EPA: .534 | EPA: .424 / .608

ORDERING CODE

Series	LED Engine	CCT	Distribution	Rotation	Voltage	Mounting
UR20 Ouro	No Lens or Clear Lens	**AM** Amber	No Lens or Clear Lens	Blank for no rotation	**UNV** 120-277V	**FM33** Flush mt 3.0" OD pole, 3" fixture base
	24L-25 3,000 lm	**3K7** 3000K, 70 CRI	**FR** Type 1/Front Row	**L**[1] Optic rotation left	**347** 347V	**FM44** Flush mt 3.6" to 4.0" OD pole, 4" fixture base
	24L-65 7,000 lm	**3K8** 3000K, 80 CRI	**2** Type II	**R**[1] Optic rotation right	**480** 480V	**PT23** 3" Post Top mount for 2 3/8" OD Tenon
	56L-75 10,000 lm	**3K9** 3000K, 90 CRI	**3** Type III		**DALI** 120-277V†	**PT24** 4" Post Top mount for 2 3/8" OD Tenon
	56L-110 15,000 lm	**4K7** 4000K, 70 CRI	**4** Type IV		†Consult factory	**PT34** 4" Post Top mount for 2 7/8" OD Tenon
	56L-140 17,000 lm	**4K8** 4000K, 80 CRI	**4W** Type IV Wide			
	HDL - High Diffusion Lens	**5K7** 5000K, 70 CRI	**5QM** Type V Square Medium			
	28L-30 3,000 lm		**5QN** Type V Square Narrow			
	28L-70 7,000 lm		**5R** Type V Rectangular			
	68L-80 9,000 lm		**5W** Type V Wide (Round)			
	68L-115 13,000 lm		HDL - High Diffusion Lens			
	68L-150 15,000 lm		**3** Type III/Asymmetric			
			5W Type V/Symmetric			

Fixture Finish	Control Options		Options	Control Accessories^
BLS Black Gloss Smooth	**7PR-TL** 7 pin PCR with twist lock photocontrol	**SWPM-40F**[2,3,4,5] SiteSync with Sensor 9' to 40' MH	**BC**[6] Back-light Control	**SW7PR**[2,3] SiteSync with 7 pin PCR
BLT Black Matte Textured	**7PR-SC** 7 pin PCR with shorting cap	**WSP-40F-1**[2,5] Dimming Occ. Sensor for up to 40′ MH, 120/277/347V	**SF** Single Fuse	**SWUSB** SiteSync Software on USB
DBS Dark Bronze Gloss Smooth	**7PR** 7 pin PCR, wireless control enabled	**WSP-40F-2**[2,5] Dimming Occ. Sensor for up to 40′ MH, 208/240V	**DF** Double Fuse	**SWTAB** SiteSync Windows® Tablet
GTT Graphite Matte Textured	**AD-01**[2] AstroDIM: 50% output at midnight	**WSP-40F-3**[2,5] Dimming Occ. Sensor for up to 40′ MH, 480V	**TB** Terminal Block	**SWBRG** SiteSync Wireless Bridge Node
LGS Light Grey Gloss Smooth	**AD-02**[2] AstroDIM: 50% output midnight to 4 AM	**NXSPW14F**[2,5] NX Wireless, PIR Sensor, 14'	**CLR**[5] Clear Lens	**WIR-RME-L** wiSCAPE External Fixture Module
PSS Platinum Silver Smooth	**AD-03**[2] AstroDIM: 50% output 10PM	**NXSPW30F**[2,5] NX Wireless, PIR Occupancy Sensor, Dimming Daylight Harvesting, 30'.	**TL** Tamper proof latch	**SCL-R** Occ. Sensor for Round Pole (up to 16' MH)
VGS Verde Green Smooth	**AD-04**[2] AstroDIM: 50% output 10PM to 4AM	**NXSP14F**[2,5] NX, PIR Occupancy Sensor, Dimming Daylight Harvesting, 14'		**SCL -S** Occ. Sensor for Square Pole (up to 16' MH)
WHS White Gloss Smooth	**NXWE** NX Wireless Enabled	**NXSP30F**[2,5] NX, PIR Occupancy Sensor, Dimming Daylight Harvesting, 30'		**SCH-R** Occ. Sensor for Round Pole (16' to 30' MH)
CC Custom Color†	**SWP**[2,3,4] SiteSync Pre commission			**SCH-S** Occ. Sensor for Square Pole (16' to 30' MH)
†Consult factory				**NXOFM-1R1D-UNV** NX 7-pin Module
				^ Please refer to page 8 for ordering details

1 Not available with 5QM, 5QN, and 5W distributions.
2 Not available with other sensor or wireless control options.
3 Specify group and zone at time of order. See www.hubbelllighting.com/sitesync for more details. Order at least one SiteSync interface accessory SWUSB or SWTAB. Each option contains SiteSync License, GUI, and Bridge Node.
4 Not available with 347V and 480V
5 24L & 56L only.
6 Not available with Type V distributions or HDL option.

Microsoft, Encarta, MSN, and Windows are either registered trademarks or trademarks of Microsoft Corporation in the United States and/or other countries.

Kim Lighting reserves the right to change specifications without notice.

LUMINAIRE PERFORMANCE

LED #	Nominal Lumen Package	Nominal Wattage	Lens Options	Distribution	3000K					4000K					5000K				
					Lumen	BUG Rating			lm/w	Lumen	BUG Rating			lm/w	Lumen	BUG Rating			lm/w
						B	U	G			B	U	G			B	U	G	
24L	3,000	25	No Lens	FR	2932	0	0	1	115	3119	0	0	1	123	3098	0	0	1	124
				FR-BC	1994	0	0	0	78	2121	0	0	0	83	2107	0	0	0	83
				2	2943	1	0	1	116	3099	1	0	1	122	3110	1	0	1	124
				2-BC	1724	0	0	1	68	1834	0	0	1	72	1822	0	0	1	72
				3	3007	1	0	1	118	3200	1	0	1	126	3178	1	0	1	127
				3-BC	1830	0	0	1	73	1947	0	0	1	78	1934	0	0	1	77
				4	3056	0	0	1	120	3251	0	0	1	128	3229	0	0	1	129
				4-BC	2235	0	0	1	88	2377	0	0	1	93	2362	0	0	1	93
				4W	3078	1	0	2	121	3276	1	0	2	129	3253	1	0	2	130
				4W-BC	1855	0	0	1	73	1975	0	0	1	78	1961	0	0	1	77
				5QM	2931	2	0	1	115	3119	2	0	1	123	3098	2	0	1	124
				5QN	2694	2	0	1	106	2866	2	0	1	113	2847	2	0	1	114
				5R	3054	2	0	2	120	3250	2	0	2	128	3228	2	0	2	129
				5W	3043	2	0	1	120	3237	2	0	1	127	3216	2	0	1	129
			Clear Lens	FR	2773	0	0	1	109	2951	0	0	1	116	2930	0	0	1	117
				FR-BC	1886	0	0	1	74	2007	0	0	1	79	1993	0	0	1	78
				2	2784	1	0	1	109	2963	1	0	1	116	2942	1	0	1	118
				2-BC	1631	0	0	1	64	1736	0	0	1	68	1723	0	0	1	67
				3	2845	1	0	1	111	3028	1	0	1	119	3007	1	0	1	120
				3BC	1806	0	0	1	72	1922	0	0	1	77	1909	0	0	1	76
				4	2891	0	0	1	113	3076	0	0	1	120	3055	0	0	1	122
				4-BC	2114	0	0	1	83	2250	0	0	1	88	2234	0	0	1	88
				4W	2912	1	0	1	114	3099	1	0	2	121	3077	1	0	2	123
				4W-BC	1755	0	0	1	69	1868	0	0	1	73	1855	0	0	1	5
				5QM	2773	1	0	1	109	2950	2	0	1	116	2931	2	0	1	117
				5QN	2549	1	0	0	100	2712	2	0	1	106	2693	2	0	1	108
				5R	2890	2	0	2	113	3075	2	0	2	120	3054	2	0	2	122
				5W	2879	2	0	1	113	3064	2	0	1	120	3042	2	0	1	122
28L		30	HDL Lens	3	2816	1	0	1	96	2997	1	0	1	102	3020	1	0	1	101
				5W	2917	1	0	1	100	3105	1	0	1	106	3084	1	0	1	103

Kim Lighting reserves the right to change specifications without notice.

LUMINAIRE PERFORMANCE

LED #	Nominal Lumen Package	Nominal Wattage	Lens Options	Distribution	3000K					4000K					5000K				
					Lumen	BUG Rating			lm/w	Lumen	BUG Rating			lm/w	Lumen	BUG Rating			lm/w
						B	U	G			B	U	G			B	U	G	
24L	7,000	65	No Lens	FR	6754	1	0	1	104	7187	1	0	1	111	7138	1	0	1	110
				FR-BC	4392	0	0	1	68	4673	0	0	1	72	4641	0	0	1	71
				2	6571	1	0	2	101	6992	1	0	2	108	6944	1	0	2	107
				2-BC	3799	0	0	1	58	4042	0	0	1	62	4014	0	0	1	62
				3	6625	1	0	2	102	7051	1	0	2	108	7002	1	0	2	108
				3BC	4032	0	0	1	62	4291	0	0	1	66	4261	0	0	1	66
				4	6788	1	0	2	104	7223	1	0	2	111	7174	1	0	2	110
				4-BC	4924	0	0	2	76	5239	0	0	2	81	5203	0	0	2	80
				4W	6699	1	0	2	103	7128	1	0	3	110	7079	1	0	3	109
				4W-BC	4088	0	0	2	63	4350	0	0	2	67	4321	0	0	2	66
				5QM	7025	3	0	1	108	7477	3	0	1	115	7425	3	0	1	114
				5QN	6964	3	0	1	107	7410	3	0	1	114	7323	3	0	1	113
				5R	7038	3	0	3	108	7489	3	0	3	115	7437	3	0	3	114
				5W	7011	3	0	2	108	7460	3	0	2	115	7409	3	0	2	114
			Clear Lens	FR	6432	1	0	1	97	6844	1	0	1	104	6798	1	0	1	105
				FR-BC	4182	0	0	1	63	4450	0	0	1	67	4420	0	0	1	67
				2	6258	1	0	1	95	6659	1	0	2	101	6613	1	0	2	102
				2-BC	3617	0	0	1	55	3849	0	0	1	58	3823	0	0	1	58
				3	6310	1	0	2	96	6714	1	0	2	102	6668	1	0	2	103
				3-BC	3599	0	0	1	55	3829	0	0	1	59	3803	0	0	1	59
				4	6465	1	0	2	98	6879	1	0	2	104	6832	1	0	2	105
				4-BC	4688	0	0	2	71	4990	0	0	2	76	4955	0	0	2	75
				4W	6380	1	0	2	97	6789	1	0	2	103	6742	1	0	2	104
				4W-BC	3893	0	0	2	59	4143	0	0	2	63	4115	0	0	2	62
				5QM	6691	3	0	1	101	7119	3	0	1	108	7070	3	0	1	109
				5QN	6632	2	0	1	100	7058	3	0	1	107	7009	3	0	1	108
				5R	6702	3	0	3	102	7131	3	0	3	108	7082	3	0	3	109
				5W	6676	3	0	2	101	7104	3	0	2	108	7055	3	0	2	109
28L		70	HDL Lens	3	6047	2	0	2	92	6047	2	0	2	92	6236	2	0	2	89
				5W	6221	2	0	1	94	6619	2	0	1	100	6525	2	0	1	93

Kim Lighting reserves the right to change specifications without notice.

LUMINAIRE PERFORMANCE

LED #	Nominal Lumen Package	Nominal Published Wattage	Lens Options	Distribution	3000K					4000K					5000K				
					Lumen	BUG Rating			lm/w	Lumen	BUG Rating			lm/w	Lumen	BUG Rating			lm/w
						B	U	G			B	U	G			B	U	G	
56L	10,000	75	No Lens	FR	9315	1	0	1	124	9913	1	0	1	132	9845	1	0	1	131
				FR-BC	6058	0	0	1	81	6445	0	0	1	86	6402	0	0	1	85
				2	9063	2	0	2	120	9644	2	0	2	128	9578	2	0	2	128
				2-BC	5239	0	0	1	70	5575	0	0	1	74	5536	0	0	1	74
				3	9139	2	0	2	125	9725	2	0	2	134	9657	2	0	2	129
				3-BC	5561	0	0	2	74	5877	0	0	2	78	5561	0	0	2	74
				4	9362	1	0	2	124	9362	1	0	2	124	9876	1	0	2	132
				4-BC	6791	0	0	2	90	7226	0	0	2	96	7168	0	0	2	96
				4W	9240	2	0	3	123	9832	2	0	3	131	9765	2	0	3	130
				4W-BC	5639	0	0	2	75	6001	0	0	2	80	5959	0	0	2	79
				5QM	9691	3	0	1	129	10312	3	0	1	137	10240	3	0	1	137
				5QN	9606	3	0	1	128	10222	3	0	1	136	10151	3	0	1	135
				5R	9706	3	0	3	129	10328	3	0	3	137	10258	3	0	3	137
				5W	9669	4	0	2	129	10289	4	0	2	137	10217	4	0	2	136
			Clear Lens	FR	8871	1	0	1	117	9760	1	0	1	129	9374	1	0	1	125
				FR-BC	5769	0	0	1	76	6138	0	0	1	81	6096	0	0	1	81
				2	8631	2	0	2	114	9183	2	0	2	121	9121	2	0	2	122
				2-BC	4989	0	0	1	67	5309	0	0	1	71	5272	0	0	1	62
				3	8703	1	0	2	115	9260	2	0	2	122	9197	2	0	2	123
				3-BC	4964	1	0	1	66	5282	1	0	2	70	5245	1	0	2	69
				4	8916	1	0	2	118	9487	1	0	2	125	9423	1	0	2	126
				4-BC	6467	0	0	2	85	6881	0	0	2	91	6834	0	0	2	90
				4W	8799	2	0	3	116	9363	2	0	3	124	9300	2	0	3	124
				4W-BC	5370	0	0	2	72	5714	1	0	2	76	5675	0	0	2	76
				5QM	9228	3	0	1	122	9820	3	0	1	130	9752	3	0	1	130
				5QN	9147	3	0	1	121	9734	3	0	1	129	9668	3	0	1	129
				5R	9244	3	0	3	122	9836	3	0	3	130	9769	3	0	3	130
				5W	9208	4	0	2	122	9798	4	0	2	130	9732	4	0	2	130
68L		80	HD Lens	3	7853	2	0	2	99	8356	2	0	2	106	8299	2	0	2	104
				5W	8080	2	0	2	102	8684	3	0	2	110	8684	3	0	2	109

Kim Lighting reserves the right to change specifications without notice.

LUMINAIRE PERFORMANCE

LED #	Nominal Lumen Package	Nominal Published Wattage	Lens Options	Distribution	3000K					4000K					5000K				
					Lumen	BUG Rating			lm/w	Lumen	BUG Rating			lm/w	Lumen	BUG Rating			lm/w
						B	U	G			B	U	G			B	U	G	
56L	15,000	110	No Lens	FR	13533	1	0	1	125	14399	1	0	2	133	14301	1	0	2	130
				FR-BC	8799	1	0	1	81	9363	1	0	1	86	9300	1	0	1	85
				2	13165	2	0	2	121	14009	2	0	2	129	13913	2	0	2	126
				2-BC	7611	1	0	2	70	8098	1	0	2	75	8042	1	0	2	74
				3	13275	2	0	3	122	14126	2	0	3	130	14030	2	0	3	128
				3-BC	8079	1	0	2	73	8596	1	0	2	78	8538	1	0	2	78
				4	13601	1	0	3	125	14472	1	0	3	133	14373	1	0	3	131
				4-BC	9865	1	0	2	91	10497	1	0	3	97	10425	1	0	3	96
				4W	13422	2	0	3	124	14283	2	0	3	132	14185	2	0	3	129
				4W-BC	8191	1	0	3	75	8715	1	0	3	80	8656	1	0	3	80
				5QM	14077	4	0	2	130	14979	4	0	2	138	14876	4	0	2	135
				5QN	13953	4	0	1	129	14848	4	0	1	137	14747	4	0	1	134
				5R	14100	4	0	4	130	15004	4	0	4	138	14901	4	0	4	135
				5W	14046	4	0	2	129	14946	4	0	2	138	14844	4	0	3	135
			Clear Lens	FR	12803	1	0	1	118	13624	1	0	1	126	13531	1	0	1	123
				FR-BC	9298	1	0	1	86	8325	1	0	1	77	8798	1	0	1	81
				2	12455	2	0	2	115	13254	2	0	2	123	13164	2	0	2	120
				2-BC	7200	1	0	1	67	7661	1	0	2	71	7610	1	0	2	70
				3	12560	2	0	3	116	13365	2	0	3	124	13273	2	0	3	121
				3-BC	7163	1	0	2	65	7622	1	0	2	69	7570	1	0	2	69
				4	12868	1	0	3	119	13692	1	0	3	127	13599	1	0	3	124
				4-BC	9333	1	0	2	86	9931	1	0	2	92	9864	1	0	2	90
				4W	12699	2	0	3	117	13513	2	0	3	125	13420	2	0	3	122
				4W-BC	7750	1	0	3	72	8246	1	0	3	76	8190	1	0	3	76
				5QM	13318	3	0	2	123	14172	4	0	2	131	14075	4	0	2	128
				5QN	13202	3	0	1	122	14048	4	0	1	130	13951	4	0	1	127
				5R	13341	4	0	4	123	14195	4	0	4	131	14099	4	0	4	128
				5W	13290	4	0	2	123	14141	4	0	2	131	14044	4	0	2	128
68L		115	HD Lens	3	11577	2	0	2	102	12320	2	0	2	109	12236	2	0	2	106
				5W	11912	3	0	2	105	12676	3	0	2	112	12588	3	0	2	109

Kim Lighting reserves the right to change specifications without notice.

LUMINAIRE PERFORMANCE

LED #	Nominal Lumen Package	Nominal Published Wattage	Lens Options	Distribution	3000K					4000K					5000K				
					Lumen	BUG Rating			lm/w	Lumen	BUG Rating			lm/w	Lumen	BUG Rating			lm/w
						B	U	G			B	U	G			B	U	G	
56L	17,000	140	No Lens	FR	15323	2	0	2	111	16306	2	0	2	118	16194	2	0	2	116
				FR-BC	9964	1	0	1	72	10603	1	0	1	77	10530	1	0	1	76
				2	14897	2	0	2	108	15852	2	0	2	115	15743	2	0	2	112
				2-BC	8618	1	0	2	63	9169	1	0	2	67	9107	1	0	2	66
				3	15032	2	0	3	109	15996	2	0	3	116	15886	2	0	3	113
				3-BC	9147	1	0	2	65	9733	1	0	2	70	9667	1	0	2	69
				4	15400	1	0	3	112	16387	1	0	4	119	16275	1	0	4	116
				4-BC	11170	1	0	3	81	11886	1	0	3	86	11804	1	0	3	86
				4W	15198	2	0	4	110	16173	3	0	4	117	16062	3	0	4	115
				4W-BC	9275	1	0	3	67	9869	1	0	3	72	9801	1	0	3	71
				5QM	15939	4	0	2	116	16962	4	0	2	123	16845	4	0	2	120
				5QN	15801	4	0	1	115	16813	4	0	1	122	16698	4	0	1	119
				5R	15966	4	0	4	116	16990	4	0	4	123	16874	4	0	4	121
				5W	15906	4	0	3	115	16925	4	0	3	123	16808	4	0	3	120
			Clear Lens	FR	14541	1	0	2	105	15473	2	0	2	111	15367	2	0	2	110
				FR-BC	9456	1	0	1	68	10061	1	0	1	72	9993	1	0	1	72
				2	14146	2	0	2	102	15053	2	0	2	108	14950	2	0	2	107
				2-BC	8178	1	0	2	59	8702	1	0	2	63	8642	1	0	2	62
				3	14265	2	0	3	103	15179	2	0	3	109	15076	2	0	3	108
				3BC	8136	1	0	2	58	8657	1	0	2	62	8598	1	0	2	61
				4	14614	1	0	3	105	15551	1	0	3	112	15445	1	0	3	110
				4-BC	10600	1	0	3	76	11279	1	0	3	81	11203	1	0	3	81
				4W	14423	2	0	3	104	15347	2	0	4	111	15243	2	0	4	109
				4W-BC	8802	1	0	3	63	9365	1	0	3	67	9302	1	0	3	67
				5QM	15126	4	0	2	109	16095	4	0	2	116	15985	4	0	2	114
				5QN	14994	4	0	1	108	15955	4	0	1	115	15846	4	0	1	113
				5R	15152	4	0	4	109	16122	4	0	4	116	16012	4	0	4	114
				5W	15094	4	0	3	109	16061	4	0	3	116	15951	4	0	3	114
68L		115	HD Lens	3	13240	2	0	2	89	13992	3	0	3	95	13897	3	0	3	93
				5W	13623	3	0	2	92	14396	3	0	2	97	14298	3	0	2	95

Electrical Characteristics												Dimming				
System Watts	Drive Current	Line Voltage		Amps AC						Min. Power Factor	Max THD (%)	Dimming Range	Source current out		Absolute voltage	
		VAC	Hz	120	208	240	277	347	480				Min	Max	Min	Max
25	298mA	120-480	50/60	0.21	0.12	0.10	0.09	0.07	0.05	>0.9	20	10% to 100%	0mA	1mA	0V	10V
30	298mA			0.25	0.14	0.13	0.11	0.09	0.06							
65	800mA			0.54	0.31	0.27	0.23	0.19	0.14							
70	700mA			0.58	0.34	0.29	0.25	0.20	0.15							
75	420mA			0.63	0.36	0.31	0.27	0.22	0.16							
80	350mA			0.67	0.38	0.33	0.29	0.23	0.17							
110	600mA			0.92	0.53	0.46	0.40	0.32	0.23							
115	500mA			0.96	0.55	0.48	0.42	0.33	0.24							
140	750mA			1.17	0.67	0.58	0.51	0.40	0.29							
150	625mA			1.25	0.72	0.63	0.54	0.43	0.31							

TM-21 LIFETIME CALCULATION

Projected Lumen Maintenance (25°C / 77°F)						
HOURS	**0**	**25,000**	**36,000**	**50,000**	**100,000**	**Reported L70**
Projected Lumen Maintenance	100%	97%	95%	93%	87%	> 60,000 hrs

Kim Lighting reserves the right to change specifications without notice.

SPECIFICATIONS

Housing:

- Low copper aluminum alloy die-casting is designed as one-piece with internal cooling fins.
- Solid, cast aluminum wall creates a thermal barrier between the optical and electrical compartments.
- Molded silicone gasket throughout insures the sealing between the two compartments and provides ingress protection.
- Housing is designed with integral LED heat sink utilized for thermal transfer and for securing the location of each LED module.
- IK09 rated enclosure protects electrical equipment against external mechanical impacts.

Lens Frame:

- One-piece low copper aluminum alloy die-cast is secured to housing with 6 screws.

Backlight Control

- Optional Backlight Control on each LED module to completely control unwanted backlight.

Lens

One-piece flat glass lens slips secure with clips. Extra silicone gasketing is provided to retain a clear optical compartment.

Optical Module:

- LEDs shall be mounted to a metal printed circuit board assembly (MCPCB).
- Optical lenses shall be clear injection molded PMMA acrylic.
- Each MCPCB and optic shall be sealed to the diecast housing and sealed with a continuous one piece injection molded silicone rubber gasket.
- Patent Pending design of optical array shall independently shield each LED optic across the length of the aperture.
- Optional fixture finish optical surfaces shall not exceed BUG ratings of the standard white finish and shall be greater than or equal to the delivered lumens of the optional matte black optical surface finish.

Electrical Components

- Standard programmable driver allows for programmable drive current settings.
- Electrical components are stategically located in the driver gear compartment with a molded silicon grommet seal to provide separation from the optical chamber.
- Maximum lightning surge current 20KA with thermally protected varistor technology. Surge suppression is series circuited preventing total fixture failure. ANSI/IEEE C62.41 Category C High.
- Open circuit fault will turn off the luminaire in order to protect the sensitive electronics and acts as a signal for maintenance.
- Programmable Driver is rated for -40°C starting.
- "Thermal Shield", primary side, thermister provides protection for the sustainable life of electronic components.

Dimming:

- Dimming range from 100% to 10% through the use of the standard 0-10V interface on the programmable driver.
- Modular wiring harness in the service area provides user access to the dimming circuitry.
- Dimming circuitry compatible with 0-10V, user-defined control devices.
- Optional factory programmed dimming profile.

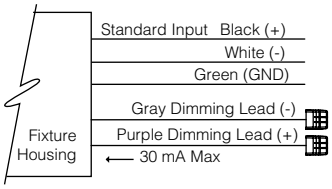

Fusing:

SF for 120, 277, and 347 Line volts

DF for 208, 240, and 480 Line volts

Hight temperature fuse holders factory installed inside the fixture housing.

Fuse is included.

Finish:

Fade and abrasion resistant, electrostatically applied, thermally cured, triglycidal isocyanurate (TGIC) polyester powdercoat.

Standard colors include (BLS) Black Gloss Smooth, (BLT) Black Matte Textured, (DBS) Dark Bronze Smooth, (GTT) Graphite Matte Textured, (LGS) Light Gray Smooth, (PSS) Platinum Silver Smooth, (VGS) Verde Green Smooth, (WHS) White Gloss Smooth, and (CC) Custom Color (Include RAL#).

Certifications and Listings:

- IUL 1598 Standard for Luminaires.
- IUL 8750 Standard for Safety for Light
- IEmitting Diode (LED) Equipment for use in Lighting Products.
- ICSA C22.2#250.0 Luminaires.
- ANSI C136.31-2010 Vibration tested and compliant 1.5G and 4G reference page 9
- IRoHS compliant.
- IIP66 rated.
- IIEC 66262 Mechanical Impact Code IK09.
- IDA approved, 3000K and warmer CCTs only.

CAUTION:

Fixtures must be grounded in accordance with national, state and/or local electrical codes. Failure to do so may result in serious personal injury.

WARRANTY:

For full warranty see: http://www.hubbelllighting.com/resources/warranty

Kim Lighting reserves the right to change specifications without notice.

CONTROLS

Photocell Receptacle

7PR

Fully gasketed and wired 7-pin receptacle option. Easy access location above the electrical compartment. 7-pin construction allows for a user-defined interface and provides a controlled definition of operational performance. ANSI twist-lock control module by-others.

Standard customer operation modes:

1. Traditional on/off photoelectric control.
2. 5-pin wireless photoelectric control for added dimming feature.
3. 7-pin wireless photoelectric control for dimming and additional I/O connections for customer use.

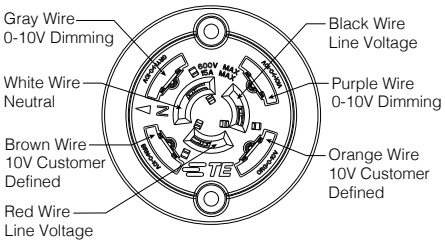

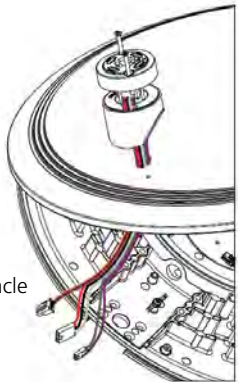

7-Pin receptacle placement

Wireless Controls

wiSCAPE™

Hubbell Control Solution's wiSCAPE™ wireless control modules allow an individual fixture to managed, monitored and measured. The modules communicate securely over a robust certified meshed radio signal. The wiSCAPE modules provide on/off/dim control, external device input, alerts and metering.

WIR-RME-L

wiSCAPE External Module,120-480V, 1000ft range (LOS), Internal Photocell, 1 Digital Input, Compatible with the A-25-7H option

SiteSync™[1]

SiteSync™ wireless control system for reduction in energy and maintenance cost while optimizing light quality 24/7. See ordering information or visit www.hubbelllighting.com/products/sitesync for more details.

Dimming WASP Occupancy Sensor

WSP

The Dimming WASP Outdoor Occupancy Sensor is specifically designed to provide 0-10VDC output for the control of dimmable fixtures. Easy to use dipswitches allow the user to adjust sensor time delay and sensitivity as well as set unoccupied and occupied dimming levels. Sensors also feature a daylight sensor for ON/OFF control of fixtures when there is sufficient natural light. Visit https://hubbellcdn.com/installationmanuals/2102B_Dimming_WASP_Install.pdf for more details.

Pole Mounted

Round Pole-Mounted Occupancy Sensor up to 16'. Select voltage and finish color.

SCL-R

Round Pole-Mounted Occupancy Sensor up to 16' - an outdoor occupancy sensor with 0-10V interface dimming control that mounts directly to the pole. Wide 360° pattern. Module colors are available in Black, Gray, and White. Module is cut for round pole mounting. Pole diameter is needed upon order. Poles to be drilled in the field will be provided with installation instructions.

Ordering Example: SCL-R44/277[2]/BL[3]

Square Pole-Mounted Occupancy Sensor up to 16'. Select voltage and finish color.

SCL-S

Square Pole-Mounted Occupancy Sensor up to 16' - an outdoor occupancy sensor with 0-10V interface dimming control that mounts directly to the pole. Wide 360° pattern. Module colors are available in Black, Gray, and White. Module is cut for square pole mounting. Pole diameter is needed upon order. Poles to be drilled in the field will be provided with installation instructions.

Ordering Example: SCL-L/277[2]/BL[3]

Round Pole-Mounted Occupancy Sensor 16' to 30'. Select voltage and finish color.

SCH-R

Round Pole-Mounted Occupancy Sensor: 16' to 30' - an outdoor occupancy sensor with 0-10V interface dimming control that mounts directly to the pole. Wide 360° pattern. Module colors are available in Black, Gray, and White. Module is cut for round pole mounting. Pole diameter is needed upon order. Poles to be drilled in the field will be provided with installation instructions.

Ordering Example: SCH-R4[4]/277[2]/BL[3]

Square Pole-Mounted Occupancy Sensor 16' to 30'. Select voltage and finish color.

SCH-S

Square Pole-Mounted Occupancy Sensor: 16 to 30' - an outdoor occupancy sensor with 0-10V interface dimming control that mounts directly to the pole. Wide 360° pattern. Module colors are available in Black, Gray, and White. Module is cut for round pole mounting. Pole diameter is needed upon order. Poles to be drilled in the field will be provided with installation instructions.

Ordering Example: SCH-S/277[2]/BL[3]

AstroDIM

AstroDIM provides multi-stage night-time power reduction based on an internal timer referenced to the power on/off time. There is no need for an external control infrastructure. The unit automatically performs a dimming profile based on the predefined scheduled reference to the midpoint, which is calculated based on the power on/off times.

[1]PRECOMMISSIONED SITESYNC ORDERING INFORMATION: When ordering a fixture with the SiteSync lighting control option, additional information will be required to complete the order. The SiteSync Commissioning Form or alternate schedule information must be completed. This form includes Project location, Group information, and Operating schedules. For more detailed information please visit www.HubbellLighting.com/products/sitesync or contact Hubbell Lighting tech support at (800) 345-4928.

SiteSync fixtures with occupancy sensor (SWPM) require the mounting height of the fixture for selection of the lens.

Examples:

SiteSync only : UR20/56L-75/3K7/UNV/ASQ/BL/SWP

SiteSync with Motion Control: UR20/56L-75/3K7/UNV/ASQ/BL/SWPM-40F

[2]Voltage, [3]Color, [4]Pole Diameter,

Kim Lighting reserves the right to change specifications without notice.

MOUNTING INSTALLATION

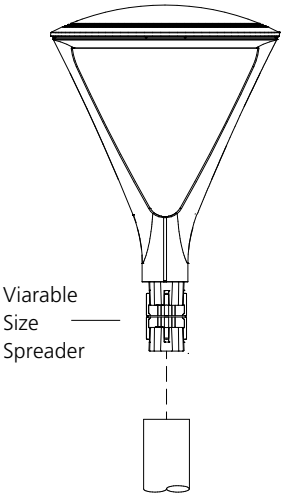

Flush Mount
FM33/44

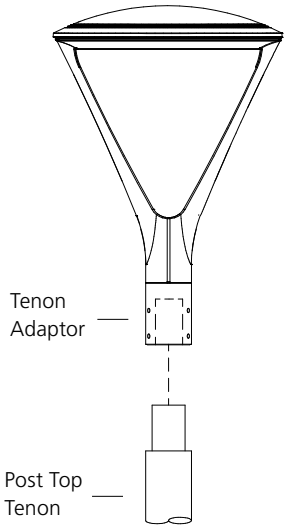

Post Top
PT23/24/34

SENSOR PLACEMENT

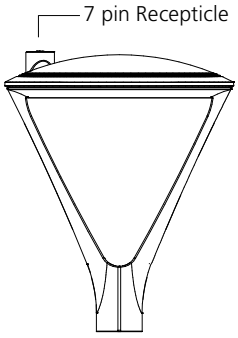

7 pin PCR
7PR

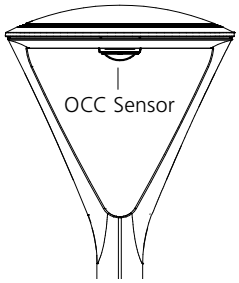

OCC Sensor
NX or WSP

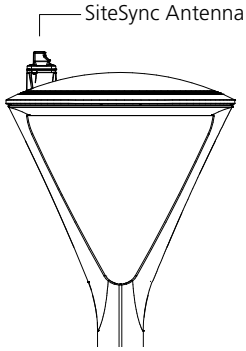

SiteSync
SW7PR

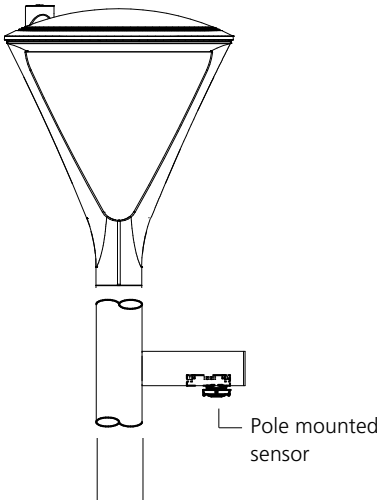

Pole Mounted Sensor
SCL-R, SCL-S, SCH-R, SCH-S

MOUNTING VIBRATION RATINGS

UR 20 Arm		UR28 Arm		UR 20 Post Top		UR 28 Post Top	
Ordering Code	Rating	Ordering Code	Rating	Ordering Code	Rating	Ordering Code	Rating
ASQ	4G	**ASQ**	4G	**FM33**	4G	**FM44**	1.5G
A34	4G	**A34**	4G	**FM44**	1.5G	**FM45**	1.5G
A46	4G	**A46**	4G	**PT23**	4G	**PT24**	1.5G
MAF	4G	**MAF**	4G	**PT24**	4G	**PT34**	1.5G
				PT34	1.5G	**PT25**	1.5G
						PT35	1.5G

For the 4 G test, ANSI C136.31-2010 Vibration is tested to comply with Vibration Test Level 1 Normal Applications, Vibration Test Level 2 Bridge/Overpass Applications, and Vibration Test Level 3

For the 1.5G test, ANSI C136.31-2010 Vibration is tested to comply with Vibration Level 1 Bridge/Overpass Applications

Kim Lighting reserves the right to change specifications without notice.

DESCRIPTION

The CSL LED striplight brings together an economical price point and high performance available in 4ft and 8ft lengths.

tradeSELECT

FEATURES

- 4,000 and 8,000 nominal lumens
- 54,000 hour LEDs at L70 for reduced maintenance
- Up to 112 lumens per watt
- Choice of two color temperatures
- 0-10V dimming, standard
- Fully assembled for quick installation
- Frosted acrylic lens
- Wide range of applications
- Surface mount on wall or ceiling
- Universal voltage (120-277V)
- 80+ CRI
- DLC® (DesignLights Consortium) Qualified - see www.designlights.org

STANDARDS, CERTIFICATION AND COMPLIANCE

All luminaires are built to UL1598 standards and bear appropriate UL labels. Damp location label standard. DLC® (DesignLights Consortium) Qualified. Please refer to the DLC website for specific product qualifications at www.designlights.org.

WARRANTY

Five year warranty. Terms and conditions apply.

ORDERING GUIDE

Catalog Number	Description	Lumens	Watts	LPW	Qty on Pallet
CSL4-4035	4ft LED Striplight, 4,000 Lumens, 3500K, 0-10V dimming	4231	40.2	105	120
CSL4-4040	4ft LED Striplight, 4,000 Lumens, 4000K, 0-10V dimming	4517	40.2	112	120
CSL8-8035	8ft LED Striplight, 8,000 Lumens, 3500K, 0-10V dimming	8460	80.5	105	120
CSL8-8040	8ft LED Striplight, 8,000 Lumens, 4000K, 0-10V dimming	9036	80.5	112	120

DIMENSIONS

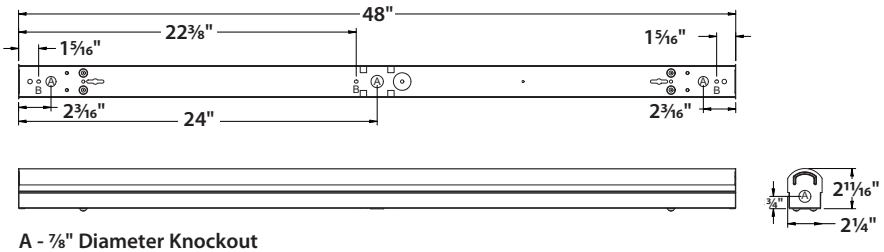

A - ⅞" Diameter Knockout
B - ⁵⁄₃₂" x ¼" Hole

Accessories (Order Separately)	
GLH5	5' adjustable cable for suspension mount

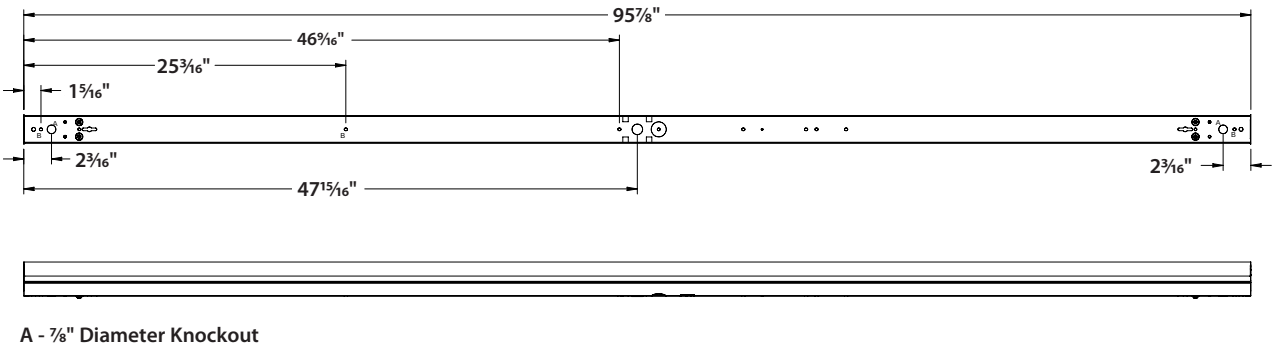

A - ⅞" Diameter Knockout
B - ⁵⁄₃₂" x ¼" Hole

© 2018 Columbia Lighting, a division of Hubbell Lighting, Inc. Please refer to on-line specification sheet for most up-to-date content as specifications are subject to change without notice.

701 Millennium Blvd. Greenville, SC 29607 / Tel **864.678.1000** / Website **www.columbialighting.com**

HUBBELL Lighting

PHOTOMETRIC DATA

Test **#17614** Test Date **2/15/2017**

LUMINAIRE DATA

Luminaire	**CSL4-4035** **tradeSELECT® CSL, Striplight** **48" x 2.25" LED striplight with opal lens**
Ballast	**SL38-1900**
Ballast Factor	**1.00**
Lamp	**LED**
Fixture Lumens	**4231**
Watts	**40.24**
Mounting	**Recessed**
Shielding Angle	**0° = 90 90° = 90**
Spacing Criterion	**0° = 1.25 90° = 1.26**
Luminous Opening in Feet	**Length: 4.00** **Width: 0.17** **Height: 0.08**

ZONAL LUMEN SUMMARY

Zone	Lumens	% Lamp	% Fixt.
0-30	935	22.1	22.1
0-40	1536	36.3	36.3
0-60	2768	65.4	65.4
0-90	3902	92.2	92.2
0-180	4231	100.0	100.0

ENERGY DATA

Total Luminaire Efficiency	**100.0%**
Total Lumens per Watt	**105**
IESNA RP-1-2004 Compliance	**Non-Compliant**
Comparative Yearly Lighting Energy Cost per 1000 Lumens	**$2.26 based on 3000 hrs. and $0.08 per KWH**

INDOOR CANDELA PLOT

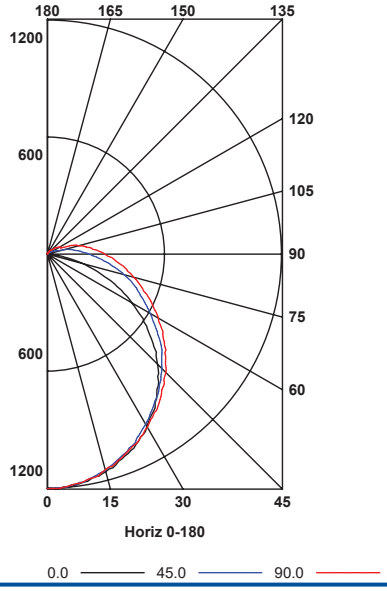

PHOTOMETRIC DATA

Test **#17615** Test Date **2/15/2017**

LUMINAIRE DATA

Luminaire	**CSL4-4040** **tradeSELECT® CSL, Striplight** **48" x 2.25" LED striplight with opal lens**
Ballast	**SL38-1900**
Ballast Factor	**1.00**
Lamp	**LED**
Fixture Lumens	**4517**
Watts	**40.24**
Mounting	**Recessed**
Shielding Angle	**0° = 90 90° = 90**
Spacing Criterion	**0° = 1.25 90° = 1.26**
Luminous Opening in Feet	**Length: 4.00** **Width: 0.17** **Height: 0.08**

ZONAL LUMEN SUMMARY

Zone	Lumens	% Lamp	% Fixt.
0-30	998	22.1	22.1
0-40	1641	36.3	36.3
0-60	2957	65.5	65.5
0-90	4167	92.2	92.2
0-180	4517	100.0	100.0

ENERGY DATA

Total Luminaire Efficiency	**100.0%**
Total Lumens per Watt	**112**
IESNA RP-1-2004 Compliance	**Non-Compliant**
Comparative Yearly Lighting Energy Cost per 1000 Lumens	**$2.12 based on 3000 hrs. and $0.08 per KWH**

INDOOR CANDELA PLOT

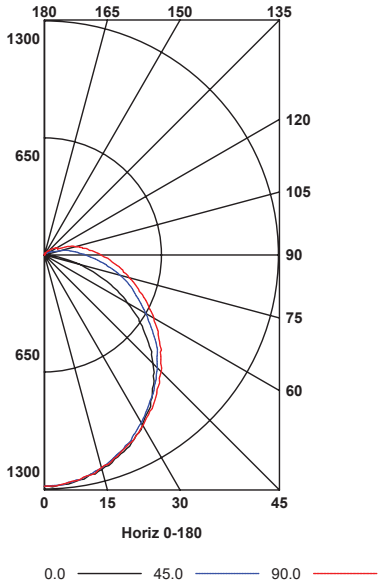

© 2018 Columbia Lighting, a division of Hubbell Lighting, Inc. Please refer to on-line specification sheet for most up-to-date content as specifications are subject to change without notice.

701 Millennium Blvd. Greenville, SC 29607 / Tel **864.678.1000** / Website **www.columbialighting.com**

Columbia LIGHTING

LXEN

Narrow Enclosed and Gasketed Fiberglass Extreme Environment / LED

LED

PROJECT INFORMATION

Project Name _____ Type _____

Catalog No. _____ Date _____

FEATURES

- Available in 4' length
- Narrow housing design for applications with limited space
- Long life 60,000 hour LEDs at L80 for reduced maintenance
- Four LED color choices
- IP65, 67 all models
- IP66 all models with standard polyacetal (POM) latches
- Fiberglass housing with F1 weatherability rating, standard
- Wet label standard
- UL Sanitation certified to NSF standards
- Gasket is non-porous to ensure seal
- Impact modified acrylic lens equivalent to 100% DR
- Lens firmly secured with captive tamper resistance ready polyacetal latches
- Stainless steel latching optional
- Removable gear tray electrical access
- Includes surface mounting brackets
- Operates from -20°C to +50°C as standard
- Optional elevated ambient on most models
- DLC® (DesignLights Consortium) Qualified - see www.designlights.org
- Five year warranty (Terms and Conditions apply)

CONSTRUCTION

Housing is formed from UL 5VA fiberglass. F1 weatherability rating, suitable for indoor or outdoor use with respect to exposure to UV light. Pour-in-place non-porous gasketing assures seal. LED affixed to removable gear tray. 8 Latches per 4' length. Latches are provided tamper resistance ready, tamper resistant screws by others. Latches are standard polyacetal (POM), optional in stainless steel. Access openings are provided for electrical connection.

SHIELDING

Lineal ribbed frosted acrylic lens impact modified equivalent to 100% DR; modification adds flexibility to reduce impact breakage compared to standard acrylic formulations.

FINISH

White painted parts are treated with a five-stage phosphate bonding process and finished with high reflectance baked enamel.

ELECTRICAL

Long-life LEDs are rated for 60,000 hours at L80 lumen maintenance. Driver options include fixed output for on/off function or continuous 0-10V dimming. QR code label affixed to housing for easy traceability.

MOUNTING

Use flexible conduit only.

CERTIFICATION

All luminaires are built to UL1598 and 2108 standards, and bear appropriate CSA labels. Ingress protection IP65, IP67 standard on all models. IP66 on certain models.. UL Sanitation Certified per NSF Standards. Wet location labeling is standard. DLC® (DesignLights Consortium) Qualified. Please refer to the DLC website for specific product qualifications at www.designlights.org. The DTS, Dimming Bypass Module, is for emergency circuit control loads including sensors and wireless systems listed to UL924. See page 3 for wiring diagram. Link to Dimming Bypass Module Specification sheet.

WARRANTY

Five year warranty (Terms and Conditions Apply).

ORDERING INFORMATION

EXAMPLE LXEN4-35LW-RFA-EDU

LXEN 4 – 4000K XW – RFA – ED U –

MODEL	SIZE	COLOR TEMP	LUMEN OUTPUT	LENS	DRIVER	VOLTAGE	OPTIONS
LXEN LED Narrow Enclosed and Gasketed	**4** 4'	**30** 3000K **35** 3500K **40** 4000K **50** 5000K	**XW** Extra Low Watt **LW** Low Watt	**RFA** Ribbed Frosted Acrylic[1]	**E** Fixed Output **ED** 0-10V Dimming	**U** 120V-277V	**GLR** Fast Blow Fuse **DTS** Dimming Bypass Module[2] **SSL** Stainless Steel Tamper Resistance Ready Latches **TP** Tamper Proof Latches **F3C8W** 3 Wire 8' Wet Cord **F3C15W** 3 Wire 15' Wet Cord **SWH** Single Wet Hub ½" NPT Hub **DWH** Dual Wet Hub ½" NPT Hub

PRODUCT AVAILABILITY

Size	Lumen Package	Nominal Lumen Range (DFA Lens)	Nominal Watts	Lumens/Watt
4'	XW	2000 - 2200	18	111 - 122
	LW	3800 - 4300	37	102 - 116

Nominal lumen range represents 3000K through 5000K. Lumens vary according to color temperatures and other factors. See specific photometric test(s).

[1] Standard impact resistant equivalent to 100% DR.
[2] For emergency circuit control loads including sensors and wireless systems listed to UL924. Only available with 0-10V driver. See page 3 for wiring diagram

© 2019 Columbia Lighting, a division of Hubbell Lighting, Inc. Specifications subject to change without notice.
701 Millennium Blvd. Greenville, SC 29607 / Tel **864.678.1000** / Website **www.columbialighting.com**

HUBBELL Lighting

PHOTOMETRIC DATA

Test **15629** Test Date **10/8/15**

LUMINAIRE DATA

Luminaire	**LXEN4-40XW-RFA-EU** **LXEN LED Narrow Enclosed and Gasketed, Extreme Environment 7" x 51" LED with Ribbed Frosted Acrylic Diffuser**
Ballast	**XIO20C056V054BST1**
Ballast Factor	**1.00**
Lamp	**LED**
Fixture Lumens	**2095**
Watts	**17.70**
Mounting	**Surface**
Shielding Angle	**0° = 90 90° = 90**
Spacing Criterion	**0° = 1.19 90° = 1.18**
Luminous Opening in Feet	**Length: 4.25** **Width: 0.31** **Height: 0.17**

ZONAL LUMEN SUMMARY

Zone	Lumens	% Lamp	% Fixt.
0-30	484	23.1	23.1
0-40	789	37.6	37.6
0-60	1435	68.5	68.5
0-90	1964	93.7	93.7
0-180	2095	100.0	100.0

ENERGY DATA

Total Luminaire Efficiency	**100%**
Total Lumens per Watt	**118**
ANSI/IESNA RP-1-2004 Compliance	**Noncompliant**
Comparative Yearly Lighting Energy Cost per 1000 Lumens	**$2.07 based on 3000 hrs. and $0.08 per KWH**

INDOOR CANDELA PLOT

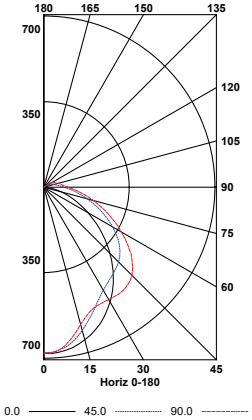

Test **15.01582** Test Date **8/27/15**

LUMINAIRE DATA

Luminaire	**LXEN4-40LW-RFA-EU** **LXEN LED Enclosed and Gasketed, Extreme Environment 7" x 51" LED with Ribbed Frosted Acrylic Diffuser**
Ballast	**XI040C110V054BPT1**
Ballast Factor	**1.00**
Lamp	**LED**
Fixture Lumens	**4085**
Watts	**36.60**
Mounting	**Surface**
Shielding Angle	**0° = 90 90° = 90**
Spacing Criterion	**0° = 1.19 90° = 1.26**
Luminous Opening in Feet	**Length: 4.13** **Width: 0.29** **Height: 0.00**

ZONAL LUMEN SUMMARY

Zone	Lumens	% Lamp	% Fixt.
0-30	900	22.0	22.0
0-40	1483	36.3	36.3
0-60	2746	67.2	67.2
0-90	3822	93.5	93.5
0-180	4085	100.0	100.0

ENERGY DATA

Total Luminaire Efficiency	**100%**
Total Lumens per Watt	**112**
ANSI/IESNA RP-1-2004 Compliance	**Noncompliant**
Comparative Yearly Lighting Energy Cost per 1000 Lumens	**$2.18 based on 3000 hrs. and $0.08 per KWH**

INDOOR CANDELA PLOT

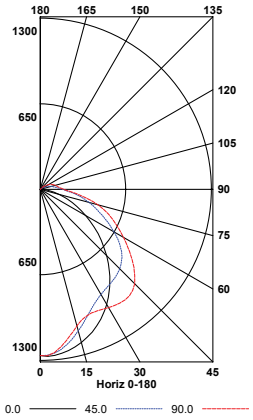

© 2019 Columbia Lighting, a division of Hubbell Lighting, Inc. Specifications subject to change without notice.
701 Millennium Blvd. Greenville, SC 29607 / Tel **864.678.1000** / Website **www.columbialighting.com**

HUBBELL Lighting

DIMENSIONAL DATA

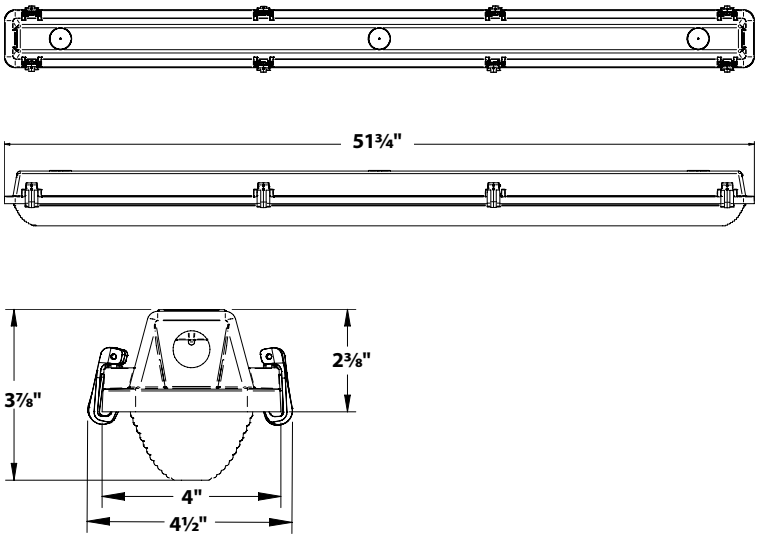

LXEN 4'

NOTE: All dimensions are in inches; dimensions and specifications are subject to change without notice. Please consult factory or check sample for verification.

DTS WIRING DIAGRAM (0–10V DIMMING DRIVER SHOWN)

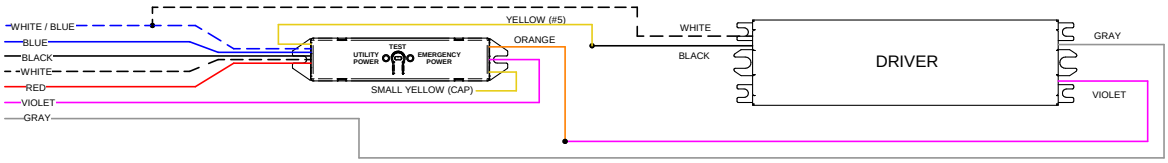

WHITE/BLUE	Emergency Neutral
BLUE	Emergency Line
BLACK	Utility Line (Unswitched Hot)
WHITE	Utility Neutral
RED	Switched Hot
VIOLET	Dimming
GRAY	Dimming

© 2019 Columbia Lighting, a division of Hubbell Lighting, Inc. Specifications subject to change without notice.
701 Millennium Blvd. Greenville, SC 29607 / Tel **864.678.1000** / Website **www.columbialighting.com**

HUBBELL Lighting

Attachment H – Splash Pad Design

SPLASHPAD DIMENSION

TOTAL AREA :	3607 ft²	335 m²
SPRAY AREA :	2328 ft²	216 m²
GRID SIZE :	2 x 2 ft	0.6 x 0.6 m

PRODUCT LEGEND

REF	PRODUCT	QTY	GPM	LPM
A	Alto N°2 VOR 7131	1	22.5	85.2
B	Aqua Dome N°1 VOR 0555	1	14.0	53.0
C	Bollard Activator N°3 VOR 0611	2	0.0	0.0
D	Directional Jet N°1 VOR 0305	6	18.0	68.1
E	Fountain Spray N°1 VOR 7513	1	5.0	18.9
F	Geyser VOR 0301	1	7.5	28.4
G	Small Kite VOR 8732	2	27.0	102.2
H	Playsafe Drain N°1 VOR-1001.4000	3	0.0	0.0
I	Side Winder VOR 7518	1	6.5	24.6
J	Spray Loop VOR 0519	3	22.5	85.2
K	Sunspray N°1 VOR 7578	1	12.5	47.3
L	Super Splash N° 2 VOR 0130	1	31.5	119.2
M	Team Spray N°2 VOR 8061	1	48.0	181.7
N	Tube N°1 VOR 0220	2	15.0	56.8
O	Water Jelly N°1 VOR 7010	3	18.0	68.1
P	Waterbug N°2 VOR 7581	1	6.0	22.7
Q	Wave VOR 0327	1	5.5	20.8
		QTY	GPM	LPM
	TOTAL	31	259.5	982.2

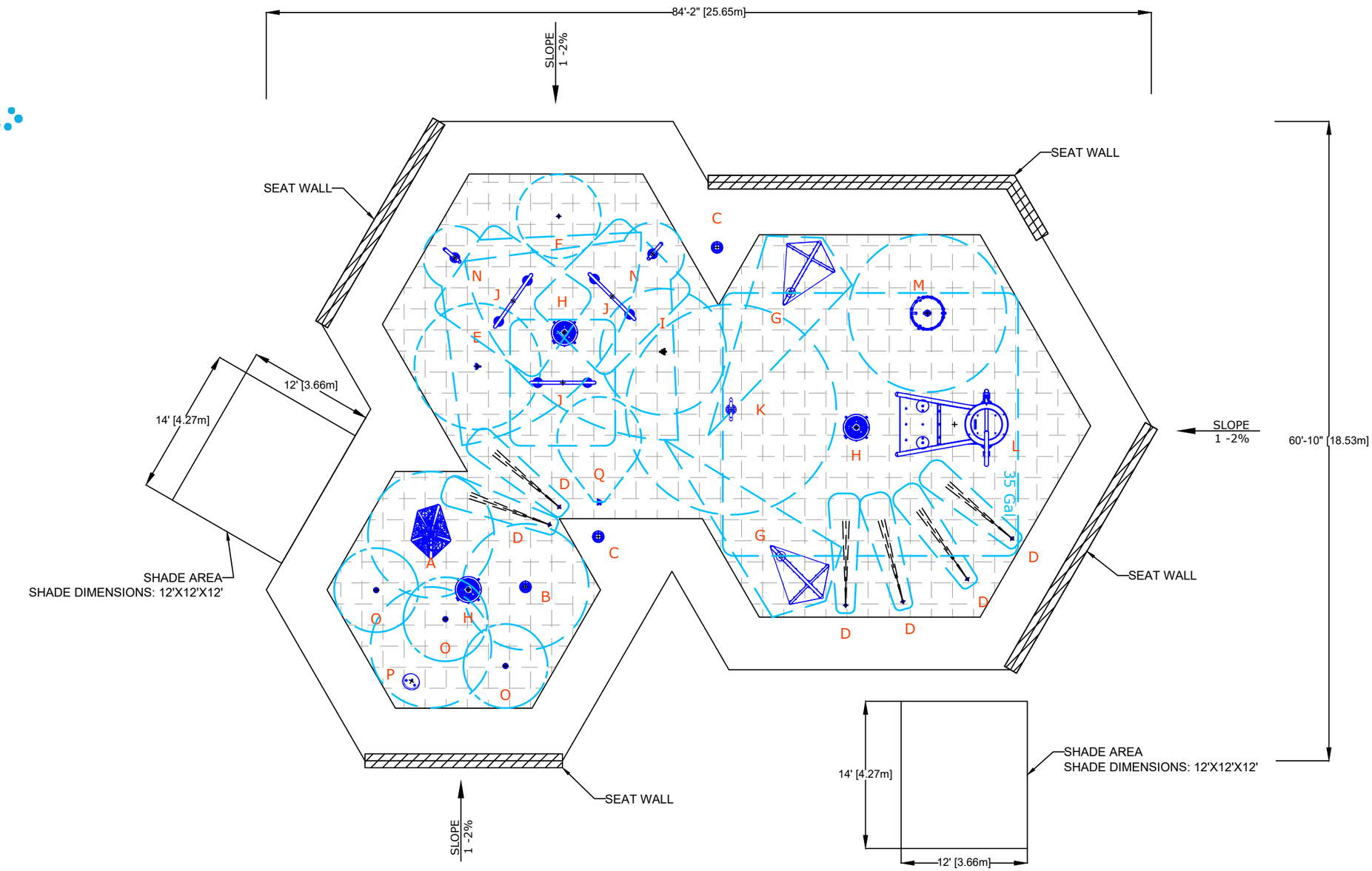

5'[1.5m] SPRAY FREE AREA ALL AROUND THE SPLASHPAD

Bakken Park Splashpad, WI

Version D - 31141

November 22, 2019

SPLASHPAD LAYOUT DRAWING

SCALE :3/32":1'

11" X 17" sheet size

VORTEX

COPYRIGHT VORTEX AQUATIC STRUCTURES INTERNATIONAL 2006-THIS DOCUMENTS AND THE IDEAS, RENDERINGS AND OTHER CONTENTS CONTAINED THEREIN ARE THE SOLE PROPERTY OF VORTEX AQUATIC STRUCTURES INTERNATIONAL AND MAY NOT BE DISSEMINATED, COPIED, REPRODUCED OR OTHERWISE USED WITHOUT PRIOR WRITTEN CONSENT OF VORTEX AQUATIC STRUCTURES INTERNATIONAL

Bakken Park Splashpad

WISCONSIN, USA

OUR WATER PLAY SPACES ARE

MORE THAN ENTERTAINMENT.

THEY BECOME A FOCAL POINT OF YOUR SITE, A PLACE WHERE VISITING BECOMES A **RITUAL.**

THEY FOSTER **GROWTH, IMAGINATION, INTERACTIONS.**

ENDLESS **THRILLS.**

MEMORIES.

A UNIQUELY UNFORGETTABLE EXPERIENCE, FOR ALL.

LET'S PLAY!

VORTEX

SPLASHPAD®
VIEW 1

Bakken Park Splashpad, WI
Version E - 31141

VORTEX

VORTEX AQUATIC STRUCTURES INTERNATIONAL INC. VORTEX-INTL.COM 1.877.586.7839 ©2012 VORTEX INTERNATIONAL, ALL RIGHTS RESERVED

SPLASHPAD®
VIEW 2

Bakken Park Splashpad, WI
Version E - 31141

VORTEX

 ©2012 VORTEX INTERNATIONAL, ALL RIGHTS RESERVED

SPLASHPAD®
VIEW 3

Bakken Park Splashpad, WI
Version E - 31141

VORTEX

VORTEX AQUATIC STRUCTURES INTERNATIONAL INC. VORTEX-INTL.COM1.877.586.7839 ©2012VORTEXINTERNATIONAL,ALLRIGHTSRESERVED

SPLASHPAD®
VIEW 4

Bakken Park Splashpad, WI
Version E - 31141

VORTEX

VORTEX AQUATIC STRUCTURES INTERNATIONAL INC. VORTEX-INTL.COM 1.877.586.7839 ©2012 VORTEX INTERNATIONAL, ALL RIGHTS RESERVED

SPLASHPAD®
VIEW 5

Bakken Park Splashpad, WI
Version E - 31141

VORTEX

VORTEX AQUATIC STRUCTURES INTERNATIONAL INC. VORTEX-INTL.COM 1.877.586.7839 ©2012 VORTEX INTERNATIONAL, ALL RIGHTS RESERVED

SPLASHPAD®
VIEW 6

Bakken Park Splashpad, WI
Version E - 31141

VORTEX

VORTEX AQUATIC STRUCTURES INTERNATIONAL INC. VORTEX-INTL.COM 1.877.586.7839 ©2012 VORTEX INTERNATIONAL, ALL RIGHTS RESERVED

PLAY VALUE PLANNING

SENSORY
Stimulates & develops multiple sense experiences

SPRAY
Encourages teamwork & competition

CIRCUIT
Encourages physical development

ICONIC
Features interactive fun & serves as a social gathering place

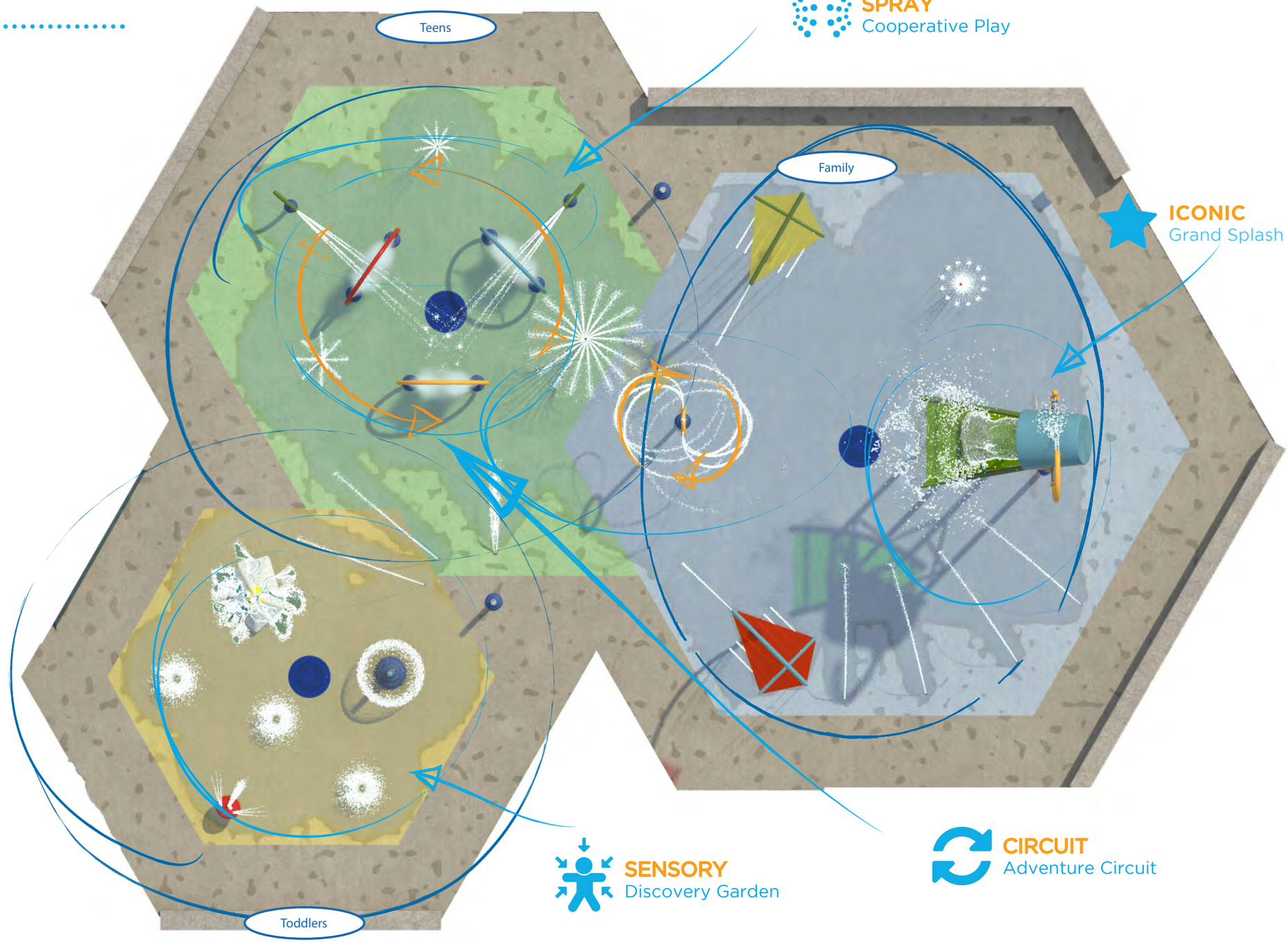

Bakken Park Splashpad, WI
Version E - 31141

VORTEX

VORTEX AQUATIC STRUCTURES INTERNATIONAL INC. VORTEX-INTL.COM 1.877.586.7839 ©2012 VORTEX INTERNATIONAL, ALL RIGHTS RESERVED

SPLASHPAD® COMPONENTS

Total area: 3607 ft² (335 m²)

Spray area: 2328 ft² (216 m²)

REF	PRODUCT	QTY	GPM	LPM
1	Alto N°2 VOR 7131	1	22.5	85.2
2	Aqua Dome N°1 VOR 0555	1	14	53
3	Bollard Activator N°3 VOR 0611	2	0	0
4	Directional Jet N°1 VOR 0305	6	18	68.1
5	Fountain Spray N°1 VOR 7513	1	5	18.9
6	Geyser VOR 0301	1	7.5	28.4
7	Small Kite VOR 8732	2	27	102.2
8	Playsafe Drain N°1 VOR-1001.4000	3	0	0
9	Side Winder VOR 7518	1	6.5	24.6
10	Spray Loop VOR 0519	3	22.5	85.2
11	Sunspray N°1 VOR 7578	1	12.5	47.3
12	Super Splash N° 2 VOR 0130	1	31.5	119.2
13	Team Spray N°2 VOR 8061	1	48	181.7
14	Tube N°1 VOR 0220	2	15	56.8
15	Water Jelly N°1 VOR 7010	3	18	68.1
16	Waterbug N°2 VOR 7581	1	6	22.7
17	Wave VOR 0327	1	5.5	20.8
	TOTAL WATER FLOW	QTY	GPM	LPM
		31	259.5	982.2

Note:
Seat wall length : 103 ft
Shade dimensions : L 12 ft x W 12 ft x H 12 ft
Seat wall & shade are not for construction, conceptual only

Colored concrete and Environment are for Illustration purpose only and not supplied by Vortex. Not for construction

VORTEX AQUATIC STRUCTURES INTERNATIONAL INC. VORTEX-INTL.COM 1.877.586.7839 ©2012 VORTEX INTERNATIONAL, ALL RIGHTS RESERVED

VORTEX

A CLEAR SOURCE OF FUN

Attachment I – CSM

CERTIFIED SURVEY MAP

LOCATED IN THE NW 1/4 OF THE NW 1/4 AND THE SW 1/4 OF THE NW 1/4, IN SECTION 16, T7N, R11E, IN THE VILLAGE OF COTTAGE GROVE, DANE COUNTY, WISCONSIN

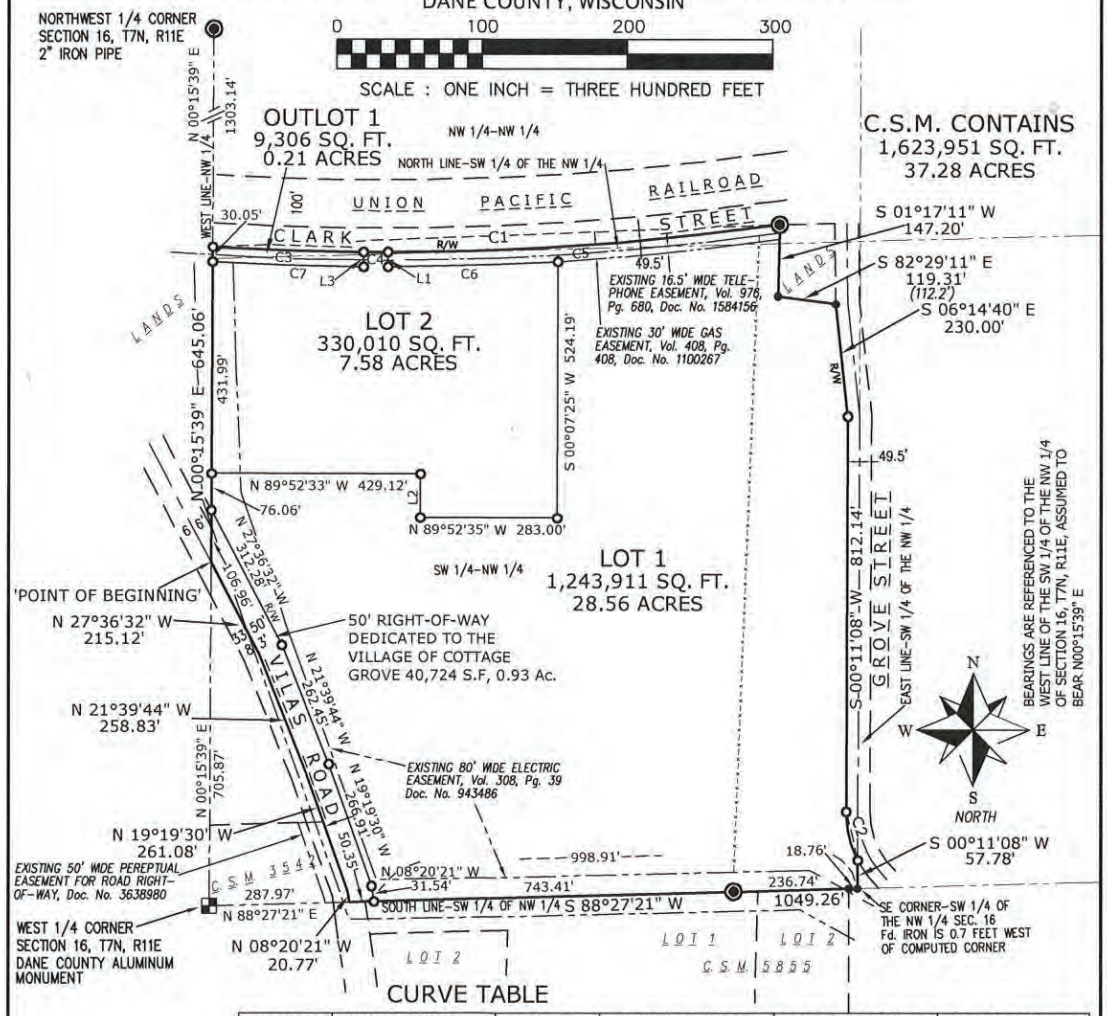

CURVE TABLE

CURVE	ARC LENGTH	RADIUS	CHORD BEARING	CHORD LENGTH	DELTA ANGLE
C1	1171.88'	5829.08'	N 87°42'48" E	1169.91'	11°31'08"
C2	104.18'	215.00'	S 13°41'45" E	103.16'	27°45'46"
C3	310.18'	5829.08'	N 88°03'06" W	310.14'	03°02'56"
C4	50.00'	5829.08'	S 89°49'18" E	50.00'	00°29'29"
C5	811.70'	5829.08'	N 85°56'36" E	811.05'	07°58'43"
C6	351.28'	5859.08'	N 88°12'56" E	351.23'	03°26'07"
C7	310.25'	5859.08'	S 88°03'39" E	310.21'	03°02'02"

LINE TABLE

LINE	BEARING	DISTANCE
L1	S 00°07'25" W	30.00'
L2	N 00°07'25" E	90.38'
L3	N 00°07'25" E	30.00'

LEGEND

- ● 3/4" SOLID IRON ROD FOUND
- ◉ IRON PIPE FOUND
- ○ 3/4"x18" SOLID IRON ROD SET 1.13 Lbs./LINEAL FOOT.
- ( ) INDICATES RECORDED AS

DISTANCES ARE MEASURED TO THE NEAREST HUNDREDTH OF A FOOT.

MAP NO. _____

DOCUMENT NO. _____

VOLUME _____ PAGE _____

SURVEYED FOR:
WISCONSIN RUGBY CLUB

OWNER:
VILLAGE OF COTTAGE GROVE
221 E. COTTAGE GROVE ROAD
COTTAGE GROVE, WI 53527

SURVEYED BY:
ISTHMUS SURVEYING, LLC
2146 OAKRIDGE AVENUE
MADISON, WI 53704
(608) 244.1090
www.isthmussurveying.com

C:\PROJECTS\090711-PROENG_RUGBY\090711-PROENG_WIRUGBYCLUB_CSM2.DWG

ATTACHMENT K

VILLAGE ACTION REPORT

PROJECT: Zoning Ordinance Text Amendment

APPLICANT: Village of Cottage Grove
REPORT DATE: January 13, 2020

PROJECT DESCRIPTION: The proposed amendment provides text for a new single-family residential zoning district with a 7,500 sq. ft. minimum lot size. The district is called SR-6 because with 7,500 sq. ft. lots the density would be approximately 6 lots per acre.

PLAN COMMISSION MEETING: January 8, 2020

STAFF REPORT PROVIDED BY: _X_ Planner, ___ Engineer, ___ Public Works

MOTION: by Broom (1st), Schulze (2nd)

The zoning ordinance text amendment was APPROVED.

VOTE: _5_ Aye, _0_ Nay, _0_ Abstain

APPLICANT COMMENTS:

- (Ruth) – provided overview of the change and background on the rationale.

PLAN COMMISSION COMMENTS:

- (Broom) – clarified that the new SR-6 district does not replace the current SR-4 district. Ruth replied that is correct. Approving the amendment does not change the zoning of any current property. In the future both SR-4 and SR-6 will be used. The comp plan identifies areas where the higher density SR-6 might be appropriate.
- (Schulze) – asked Ruth to go over the benefits of adding the new district. Ruth replied primarily the smaller lot size would allow more affordable single-family option in the Village. Also, higher densities make more efficient use of public infrastructure.

PUBLIC HEARING COMMENTS:

- None

STAFF COMMENTS:

- See planning staff report.

PLANNING STAFF REPORT

MEMO DATE: December 2, 2019
MTG. DATE: **DECEMBER 11, 2019**

TO: Village of Cottage Grove Plan Commission

CC: Village of Cottage Grove Board of Trustees
Matt Giese – Village Administrator
Lisa Kalata – Village Clerk
Lee Boushea – Village Attorney
Michael Maloney – Village Engineer

FROM: Erin Ruth, AICP – Village Planning Director

RE: **Residential Zoning Amendment**

BACKGROUND

The recent amendment of the Comprehensive Plan included the following policy in Chapter 8 – Housing:

1. *Consider adding one or more new single-family zoning districts to provide options for smaller lot sizes by right within certain areas as determined by the Future Land Use Plan.*

Currently the Village's zoning ordinance includes only one single-family residential district: SR-4 with a minimum lot size of 10,000 sq. ft.

At its November meeting, the Plan Commission reviewed examples of neighborhoods with various minimum lot sizes (based on the zoning districts in comparable communities presented in the table below).

While the Plan Commission did not take an official action, the direction was given to staff prepare a text amendment with a minimum lot size of 7,500 to 8,000 sq. ft.

The attached amendment provides text for a new district with a 7,500 minimum lot size. The district is called SR-6 as the 7,500 sq. ft. minimum creates a density of approximately 6 units per acre.

The other difference from the SR-4 district is the minimum lot width is reduced from 80' to 70'.

	DeForest	Fitchburg	McFarland	Sun Prairie	Waunakee	Cottage Grove
District name	RN-2A	R-L	R-1A	Single-Family Detached	R-2	SR-4
Min. Lot Size (in sq. ft.)	7,000	7,200	6,000	9,000	8,500	10,000
Min. Lot Width	70'	60'	50'	75'	70'	80'
Min. Street Frontage	40'	n/a	n/a	n/a	n/a	50'
Front Setback	25'	30'	25'	20'/45'	20'	25'/40'
Side Setback	8'	8'	7'	10'	6'	8'
Rear Setback	25'	25'	30'	30'	20'	30'
Max. Lot Coverage	n/a	35%	n/a	n/a	n/a	30%
Min. Landscape Surface Ratio	50%	n/a	n/a	50%	n/a	50%

STAFF RECOMMENDATION

Staff recommends **APPROVAL** of the proposed zoning text amendment.

§ 325-38 Residential districts.
B.
Single-Family Residential-6 (SR-6) District.

(1)
Description and purpose.

(a)
This district is intended to permit development that has a relatively higher density (compared to the SR-4 district) single-family residential community character. Density and intensity standards for this district are designed to ensure that the Single-Family Residential-6 (SR-6) District shall serve as a designation that preserves and protects the residential community character of its area. Residential development with a maximum gross density (MGD) of approximately six dwelling units per gross acre is available within this district.

(b)
Rationale. This district is used to provide for the permanent protection of a relatively higher density single-family residential area for those who want to live in a suburban residential environment with a smaller lot sizes (compared to the SR-4 district) to ensure that the community character is maintained as long as the SR-6 District designation is retained, regardless of how much development occurs within that area.

(2)
List of allowable principal land uses (per Article IV).

(a)
Principal land uses permitted by right (per § 325-20A).

[1]
Single-family.

[2]
Cultivation.

[3]
Selective cutting.

[4]
Passive outdoor public recreation.

[5]
Active outdoor public recreation.

[6]
Public services and utilities.

[7]
Community living arrangement (one to eight residents).

(b)
Principal land uses permitted as conditional use (per § 325-20B).

[1]
Clear cutting.

[2]
Indoor institutional.

[3]
Outdoor institutional.
[4]
Community living arrangement (nine to 15 residents).

(3)
List of allowable accessory uses (per § 325-20C).
(a)
Accessory land uses permitted by right.
[1]
Farm residence.
[2]
Private residential garage or shed.
[3]
Home occupation.
[4]
Family day-care home.
[5]
On-site parking lot.
[6]
Private residential recreational facility.
[7]
Drainage structure.
[8]
Filling.
[9]
Lawn care.
[10]
Exterior communication devices.
(b)
Accessory land uses permitted as conditional use.
[1]
Intermediate day-care home.

(4)
List of allowable temporary uses: (per § 325-20D).
(a)
Outdoor assembly.
(b)
Contractor's project office.
(c)
Contractor's on-site equipment storage.
(d)
On-site real estate sales office.

(5)
Regulations applicable to all uses.

(a)
Landscaping regulations (see Article V).
(b)
Performance standards (see Article VI).
(c)
Signage regulations (see Article VII).

(6)
Regulations applicable to residential uses.
(a)
Residential density and intensity requirements.
[1]
Minimum zoning district area: 7,500 square feet.
[2]
Maximum gross density (MGD): 6.00 dwelling units per acre.
[3]
Minimum landscape surface ratio (LSR): 50%.
[4]
Maximum building coverage: 30%.
[5]
Maximum accessory building coverage: 10%.
(b)
Residential bulk requirements.
[1]
Minimum lot area: 7,500 square feet.
[2]
Minimum lot width: 70 feet.
[3]
Minimum street frontage: 50 feet.
[4]
Minimum setbacks:
[a]
Front lot line to house or attached garage: 25 feet; 40 feet for a lot adjacent to a street with an officially mapped right-of-way equal to or exceeding 100 feet.
[Amended 4-15-2013 by Ord. No. 07-2013]
[b]
Street side lot line to attached house or nondoor side garage: 15 feet; 30 feet for a lot adjacent to a street with an officially mapped right-of-way equal to or exceeding 100 feet.
[Amended 4-15-2013 by Ord. No. 07-2013]
[c]

Street side lot line to door side of attached garage: 25 feet; 40 feet for a lot adjacent to a street with an officially mapped right-of-way equal to or exceeding 100 feet.
[Added 4-15-2013 by Ord. No. 07-2013[1]]
[1]
Editor's Note: This ordinance also redesignated former Subsection A(3)(b)[4][c] through [g] as Subsection A(3)(b)[4][d] through [h], respectively.
[d]
Side lot line to house or attached garage: 8 feet.
[e]
Total of both side lot lines to house/attached garage: 16 feet.
[f]
Rear lot line to house or attached garage: 30 feet.
[g]
Side lot line to accessory structure: three feet from property line, five feet from alley.
[h]
Rear lot line to accessory structure: three feet from property line, five feet from alley.

[5]
Required bufferyard: see § 325-62D along zoning district boundary
[6]
Minimum paved surface setback: five feet from side or rear; 10 feet from street.
[7]
Minimum dwelling unit separation: 16 feet.
[8]
Maximum height of dwelling unit: 35 feet.
[9]
Maximum height of accessory structure: 15 feet.
[10]
Minimum number of off-street parking spaces required on the lot: see parking lot requirements per specific land use in § 325-49.
[11]
Minimum dwelling size: 24 feet by 40 feet.

(7)
Regulations applicable to nonresidential uses.

(a)
Nonresidential intensity requirements.

[1]
Maximum number of floors (F): two.
[2]
Minimum landscape surface ratio (LSR): 50%.
[3]
Maximum floor area ratio (FAR): .15.

[4]
Minimum lot area (MLA): 7,500 square feet.
[5]
Maximum building size (MBS): na.

(b)
Nonresidential bulk requirements:

[1]
Minimum lot area: 7,500 square feet.
[2]
Minimum lot width: 70 feet; minimum street frontage: 50 feet.
[3]
Minimum setbacks:

[a]
Building to front or street side lot line: 25 feet; 40 feet for a lot adjacent to a street with an officially mapped right-of-way equal to or exceeding 100 feet.
[b]
Building to residential side lot line: eight feet.
[c]
Building to residential rear lot line: 30 feet.
[d]
Building to nonresidential side lot line: eight feet.
[e]
Building to nonresidential rear lot line: 30 feet.
[f]
Side lot line to accessory structure: three feet from property line, five feet from alley.
[g]
Rear lot line to accessory structure: three feet from property line, five feet from alley.

[4]
Required bufferyard: see § 325-62D along zoning district boundary.
[5]
Minimum paved surface setback: five feet from side or rear; 10 feet from street.
[6]
Minimum building separation: 16 feet.
[7]
Maximum building height: 35 feet.
[8]
Minimum number of off-street parking spaces required on the lot: see parking lot requirements per specific land use in § 325-49.

Village of Cottage Grove Notice of Public Meeting

COMMUNITY DEVELOPMENT AUTHORITY

Monday, January 13, 2020 5:30 p.m. Village Hall
221 E Cottage Grove Rd.

1. Call to order

2. Determination of quorum and that the agenda was properly posted.

3. PUBLIC APPEARANCES- Public's opportunity to speak about any subject that is not a specific agenda item.

4. Discuss and consider approval of minutes of the December 12, 2019 CDA meeting.
   Documents: 12-12-19 CDA MINUTES.PDF

5. Overview of Mid-America Economic Development Corp. Annual Site Selector Conference.
   Documents: MID AMERICA EDC.PDF

6. Discuss and consider goals for marketing project.
   Documents: CDA_MARKETING_2020-01-08.PDF

7. Future agenda items

8. Adjournment

This agenda has been prepared by Staff and approved by the Chair of the Community Development Authority for use at the meeting as listed above. Any item on the agenda is subject to final action. Notice: Persons needing special accommodations should call 608-839-4704 at least 24 hours prior to the meeting. It is possible that members of and possibly a quorum of members of other governmental bodies may be in attendance at the above stated meeting to gather information; no action will be taken by any governmental body at the above-stated meeting other than the governmental body specifically referred to above in this notice.

VILLAGE OF COTTAGE GROVE ***NOTICE OF PUBLIC MEETING***

LIBRARY PLANNING COMMITTEE

Monday, January 13, 2020
6:30 p.m.

Municipal Services Building
210 Progress Drive

AGENDA

1) **Call Meeting to Order**

2) **Quorum and roll call**

3) Public Appearances: Public's opportunity to speak about any subject that is not a specific agenda item.

4) **Presentation**: Michelle Roach with Promote Local regarding outreach.

5) **Old Business:**
   - **a.** Discuss and Consider forming a subcommittee regarding outreach (Tabled at 12/4/19 meeting);
   - b. Discuss Free Little Libraries in Village of Cottage Grove.
     Memo re Free Little Libraries.docx

6) **New Business:**
   - **a.** Discuss and consider working with Promote Local.

7) **Approve minutes:**
   - **a.** November 20, 2019, Library Planning Committee.
     12-4-19 Library Planning Committee Minutes-Draft.docx

8) **Friends of Cottage Grove Library Report:**
   - **a.** Monthly meetings
   - b. Activities

9) Set tentative date for next meeting: Wednesday, February 5, 2020, at 6:30 p.m. at Municipal Building, 210 Progress Drive, Cottage Grove.

10) **Future Agenda items**

11) **Adjournment**

Notice:

1. Persons needing special accommodations should call 839-4704 at least 24 hours prior to the meeting.
2. It is possible that members of and possibly a quorum of members of other governmental bodies may be in attendance at the above stated meeting to gather information; no action will be taken by any governmental body at the above-stated meeting other than the governmental body specifically referred to above in this notice.
3. Any item on the agenda is subject to final action.

MEMO

Date: January 8, 2020

From: Melissa Ratcliff

To: Library Planning Committee

RE: Free Little Libraries

At the December 4, 2019, Library Planning Committee, members indicated that we wanted to create a map of existing Free Little Libraries. We know there are Free Little Libraries at each of our village parks, except for Willow Run Park which is scheduled to have a new Free Little Library installed soon by the Cottage Grove Optimists, and one at the Bank of Sun Prairie. We discussed that there are also Free Little Libraries that are throughout our community that were installed by residents.

After our Library Planning Committee in December, Cindi Kelm-Nelson asked if we could ask community members to send us the addresses that they know have a Free Little Library that are throughout our community. This request could be directed to the Village Board to approve language to put on the website and Facebook page asking for residents to provide addresses of additional Free Little Libraries in our community. Some sample language for the Village Facebook Page is:

"Is there a 'Free Little Library' near you? The Library Planning Committee is asking for your assistance in mapping out the locations around our village. Please comment below if you know of a location!"

This language could also be tweaked if it was being placed on the Village Website to have the residents call Village Hall, 608-839-4704, or the Parks and Rec Department with the address of the Free Little Library.

Once we have this information, a sheet could be produced with a map showing where each of the Free Little Libraries are and have the map available for residents at Village Hall and the Parks and Rec Department. It could also be placed on the Village website. I have heard from some residents that they walk in our community, stopping at Free Little Libraries on their way and this would allow them to have a path to walk to the Free Little Libraries in their neighborhood.

Recommendations: Make a motion asking the Village Board to have a Facebook post and language on the website for one month asking our community for addresses of Free Little Libraries in our community using the sample language in this Memo.

VILLAGE OF COTTAGE GROVE ***NOTICE OF PUBLIC MEETING***

LIBRARY PLANNING COMMITTEE

Wednesday, December 4, 2019
6:30 p.m.

Municipal Services Building
210 Progress Drive

DRAFT Minutes by Anne Schoenemann

1) Call Meeting to Order by Melissa Ratcliff at 6:31 pm

2) Quorum and roll call A quorum was present. Present members: Tiffany Haas, Cindi Kelm-Nelson, David Peterson, Melissa Ratcliff, Anne Schoenemann

3) **Public Appearances:** Public's opportunity to speak about any subject that is not a specific agenda item. None

4) **Presentation -** NONE

5) Old Business:

a. Library Planning Committee agendas, dates, and minutes on Village website:
http://www.village.cottage-grove.wi.us/545/Library-Planning-Committee

b. Tracy Herold with Dane County Library Services (DCLS) provides information regarding services DCLS provides to libraries in Dane County:

- Service to all libraries in Dane Co
  1. Those communities without a library pay a county library tax
  2. Everyone can use Dane County libraries for the past 50 years
  3. There is a formula for reimbursement for libraries in Dane County that is disbursed by DCLS
  4. Collection of 45,000 items and shared county wide, DCLS building not open to public

i. Information on Bookmobile services to Village of Cottage Grove;

- 16 stops a week, 8-9 hours a day and 300 miles a week
- Dreambus focused on Madison communities (paid by grant now for service in Madison, later Madison Public Library will pay for these services)
- CG -
  - Bookmobile: Wednesdays, busiest stop in the county, 2-4pm Dublin Park and 5-8pm Piggly Wiggly parking lot
  - Handout 5 yr snapshot of items checked out by Cottage Grove residents from 3 local libraries and Bookmobile (highest to lowest use): Pinney, Bookmobile, Sun

Prairie, Monona. Notice: there is stabilization/fluctuation and decline after 2011 **due** to digital books and overdrive (database use). If added together, it evens out. Usage by Cottage Grove residents is pretty consistent for the past five years **AND** affordable streamable media (music, movies, books) at a moments notice. Libraries looking at streamable video services as a public service (ex: Hoopla). Also, examples of changes like 8 week moratorium on new McMillian books. Also, less time in daily lives to stop at libraries to pick out books/media/

- Questions:
  a) Why do families go to bookmobile? -CG has a sense of community on the bookmobile, relationships with neighbors and drivers, desire to see what is new and hold pickups, high summer reading program usage
  b) Before the meeting started, Tracy was thinking where could I go in CG to get some work done before the meeting and access to wifi? She ended up driving around because there wasn't a place she could go. A library would be perfect to fill this need.
  c) Discussion about the pro's and con's of bookmobile. Cons are that it is only on Wednesdays during set times, its not a place to hang out. Pros are at least it's a resource for our community and you can have some social time with neighbors.
  d) How does the economy affect libraries - when recession in 2008 hit, library use went up everywhere, stay vacations and to save money. New library services were added in response and usage has remained up and levels off
  e) How does the Dane County libraries keep track of people coming to libraries for other services (when they don't check out books) - not able to keep track now
  f) Can we change or increase bookmobile day? How about a different day like Saturdays. If not a physical building, can we increase days and times? Yes, pay more for more availability. What day would residents want to use the bookmobile (survey item).
  g) What are the demographics on bookmobile? Not sure but eyeball looks like families and seniors
  h) What are compliance rules on library card? Data - name, address, age range (very minimal)
  i) Why does the bookmobile go to certain spots - communities without libraries, offer services not

available or offered in community, pre- renovated libraries, added rural spots. Dream bus stops at places of high need in Madison.

ii. Programs and services that libraries provide to a community

Current services DCLS provides:

- Seniors, children - play literacy (90 sites totals)
- Job center - library card issues/sign up
- Kids' Connection (jail) - adult reads book to child, recorded and given to family
- Questions:
  - Did the recession cause more people to give feedback thus more new libraries and renovations? Yes, economically, not serve needs, population increase, resident feedback directed library to add new needs and wants, library services expanded (ex: digital maker space beyond all services already offered in maker space), people craving community space interact, touchbase, safe, comfortable, use on own terms

iii. Roles of a librarian in a community.

A. Beyond keeper of book collections
B. Community our size would require a degree'd librarian
C. Discussed how resources are organized and presented
D. Community advocacy and connections - an ambassador between people and library service/culture, building relationships
E. Looking at library services outside the school setting which has a different focus than those in the school setting.
F. Residents can use library on own terms so librarian knows what the community wants, collaborate with other Village departments (4-K, rec/parks…) and other groups in the community.
G. How do you conduct user survey - focus groups (businesses, go to where the people are, in person), canvass door to door, survey online and focus groups (dispel misinformation, talk about it and get positive energy out in the community - want to hear what residents want to say. Need Village responses - UW Extension may be a good way with mailing (DCLS had a good experience).
H. Librarians can share library information and support planning/development of funding.

6) New Business:

a. Discuss and consider forming a subcommittee regarding outreach - Maybe 2 people meet face to face, working groups, what does outreach mean: ideas what to do and how

to enact the ideas, need costs first and write clear and consistent elevator speech. Questions regarding noticing to public, if Village Board would need to approve the subcommittee, and quorum issues. M. Ratcliff motion to Table topic until next meeting, seconded by C. Kelm-Nelson, motion passes 5-0.

b. Discuss and consider hiring a survey company: Find out what other libraries have done in the past. D. Peterson made motion to contact UW Extension to give presentation, C. Kelm-Nelson seconded, motion passed 5-0.

c. Discuss current Little Free Libraries in Village of Cottage Grove. Maybe create a map of the little libraries. Will look into further.

Little Free Libraries
First four were funded by the Friends of the Library. Managed by the CG Recreation Department. Built by local volunteers .Located at four sites in the Village at -Huston Community Park, Taylor Prairie Elementary School, Near the Bank of Sun Prairie and at the CG Municipal building in the Recreation Department Office
All parks have a library except for Willow Run. There are also little free libraries at CG school and at individual homes. Information on the project: http://www.littlefreelibrary.org

7) Approve minutes:

a. November 20, 2019, Library Planning Committee. C. Kelm-Nelson made motion to approve the minutes from Nov. 20, T. Haas second, motion passed 5-0

8) Friends of Cottage Grove Library Report: (A. Schoenemann)

a. Monthly meetings: Second Thursday of the month 6:30-7:30 at 205 Yarrow Hill Drive

b. Activities: updated executive board members, updated friends' membership form and starting to build membership, participating in the parade on Dec. 6th, banners for sign on land

9) **Set tentative date for next meeting**:

a. Wednesday, January 8, 2020, at 6:30 p.m.- possible conflict with Utility Commission (meets at Municipal building) and Plan Commission, or January 15, 2020 or January 22, 2020, at 6:30 p.m.? Next meeting Monday, Jan. 13th, 2020, 6:30pm. at Municipal Building

10) Future Agenda items

UW Extension survey presentation
Information from DCLS and SCLS meeting
Outreach working groups
Components of an elevator speech (Create a fact sheet)
Create Timeline

11) Adjournment: A. Schoenemann makes motion to adjourn at 8:05 p.m., D. Peterson second, motion passed 5-0.

Notice:

1. Persons needing special accommodations should call 839-4704 at least 24 hours prior to the meeting. 2. It is possible that members of and possibly a quorum of members of other governmental bodies may be in attendance at the above stated meeting to gather information; no action will be taken by any governmental body at the above-stated meeting other than the governmental body specifically referred to above in this notice. 3. Any item on the agenda is subject to final action.

MEMO

Date: January 17, 2020

From: Melissa Ratcliff

To: Village Board

RE: Library Planning Committee regarding Free Little Libraries

At the December 4, 2019, Library Planning Committee, members indicated that they wanted to create a map of existing Free Little Libraries. There are Free Little Libraries at each of our village parks, except for Willow Run Park, which is scheduled to have a new Free Little Library installed soon by the Cottage Grove Optimists, and one at the Bank of Sun Prairie. We discussed that there are also Free Little Libraries throughout our community that were installed by residents.

After our Library Planning Committee in December, Cindi Kelm-Nelson asked if we could ask community members to send us the addresses that they know have a Free Little Library that are throughout our community. This request could be directed to the Village Board to approve language to put on the website and Facebook page asking for residents to provide addresses of additional Free Little Libraries in our community. Some sample language for the Village Facebook Page is:

"Is there a 'Free Little Library' near you? The Library Planning Committee is asking for your assistance in mapping out the locations around our village. Please comment below if you know of a location!"

This language could also be tweaked if it was being placed on the Village Website to have the residents call Village Hall, 608-839-4704, or the Parks and Rec Department with the address of the Free Little Library.

Once we have this information, a sheet could be produced with a map showing where each of the Free Little Libraries are and have the map available for residents at Village Hall and the Parks and Rec Department. It could maybe even be included in the current maps of Village parks and placed on the Village website. I have heard from some residents that they walk in our community, stopping at Free Little Libraries on their way and this would allow them to have a path to walk to the Free Little Libraries in their neighborhood.

RECOMMENDATIONS: At the 1/13/2020 Library Planning Committee, it was approved 4-0 to ask the Village Board to include language on the Village Website regarding contacting Village Hall or the Parks and Rec Department with the address of their Free Little Library and to post the following to Facebook for one month:

"Is there a 'Free Little Library' near you? The Library Planning Committee is asking for your assistance in mapping out the locations around our village. Please comment below if you know of a location!"

VILLAGE OF COTTAGE GROVE **NOTICE OF PUBLIC MEETING**

AD HOC ARCHITECTURAL REVIEW COMMITTEE

Wednesday, January 15, 2020 **Village Hall**
8:00 a.m. **221 E. Cottage Grove Road**

1.Call to Order

2. Roll Call

3. Discuss and Consider Minutes from the June 10, 2019 ARC Meeting.

Documents: 6-10-19 ARC MINUTES.PDF

4. Discuss and Consider A Request from Greywolf For Approval of a General Development Plan for A Hotel, Located at Parcel #0711-041-2120-1 In the Commerce Park.

Documents:

1. CG_HOTEL-GDP_2019-12-20.PDF
2. MSA_00094071 LANDMARK DR COMFORT SUITES HOTEL REVIEW 12-30-19.PDF
3. CSCGWI 12-18-19 SET.PDF
4. PUD GDP APPLICATION LETTER 12.19.19.PDF
5. 199415 EXISTING CONDITIONS SURVEY.PDF
6. 199415 GENERAL DEVELOPMENT PLAN.PDF

5. Adjournment

This agenda has been prepared by Staff for use at the meeting as listed above. Any item on the agenda is subject to final action. Notice: Persons needing special accommodations should call 608-839-4704 at least 24 hours prior to the meeting. It is possible that members of and possibly a quorum of members of other governmental bodies may be in attendance at the above stated meeting to gather information; no action will be taken by any governmental body at the above-stated meeting other than the governmental body specifically referred to above in this notice.

VILLAGE OF COTTAGE GROVE *NOTICE OF PUBLIC MEETING*

Village of Cottage Grove

PARKS, RECREATION and FORESTRY COMMITTEE

Thursday, January 16, 2020 **5:30 P.M.** **Municipal Services Building**

Note Time Change **210 Progress Drive**

AGENDA

1. Call to order.
2. Roll call and confirm that the meeting was properly posted.
3. **Public appearances**: Public's opportunity to speak about any subject that is not a specific agenda item.
4. Discuss and consider Monona Grove School District request to use Dublin Park as a short term evacuation site.
5. Discuss and consider location for the National Fitness Campaign court.
6. Discuss 5th Addition to Westlawn Master Plan.
7. Discuss and consider Zoozort live animal show at Northlawn Park on July 1, 2020.
8. Discuss and consider suspending no alcohol in parks ordinance for Music In The Grove 2020 events.
9. Discuss and consider the TDS proposal for internet service at Bakken Park.
10. Update on Bakken Park shelter and splash pad.
11. Parks and Recreation Directors Report.
12. Approve the minutes of the November 21, 2019 meeting.
13. Future Agenda Items
14. Adjournment.

Notice:

1. Persons needing special accommodations should call 839-4704 at least 24 hours prior to the meeting.
2. It is possible that members of and possibly a quorum of members of other governmental bodies may be in attendance at the above stated meeting to gather information; no action will be taken by any governmental body at the above-stated meeting other than the governmental body specifically referred to above in this notice.
3. Any item on the agenda is subject to final action.

ITEM 4

MEMORANDUM OF UNDERSTANDING REGARDING USE OF A FACILITY AS A SHORT-TERM EMERGENCY EVACUATION SITE

This memorandum of understanding ("Agreement") is entered into 13 day of November, 2019, ("Effective Date") by and between:

PARTIES: Dublin Park
300 Dublin Circle
Cottage Grove, WI 53527

("Owner")

And

Monona Grove School District
5301 Monona Drive
Monona, WI 53716

("District")

(Collectively, "the Parties")

RECITALS:

WHEREAS, The District has a need for a facility to serve as a short-term evacuation site for Glacial Drumlin School ("School") in the event that the School experiences an emergency or crisis requiring the evacuation of students and staff; and

WHEREAS, The Owner has a facility which includes space(s) or area(s) that are appropriate or adequate to serve as a school evacuation site for the School; and

WHEREAS, The Parties desire to reach an understanding that will result in the Owner providing a facility owned by the Owner to the District to serve as an emergency evacuation site for the School.

NOW THEREFORE, in consideration of the mutual covenants contained herein and other good and valuable consideration, the receipt and sufficiency of which is hereby acknowledged by the Parties, the Parties agree as follows:

TERMS AND CONDITIONS:

This Agreement is made for the temporary use of the facility designated below ("Facility") for use by the District as a short-term evacuation site for the School's students and staff in the event of a School evacuation. If the students and staff cannot return to the School following the evacuation, the students and staff will be bused from the Facility to their designated family reunification site to be unified with their families.

1. **Facility Name and Address**

Dublin Park
300 Dublin Circle
Cottage Grove, WI 53527
608-839-8968

2. **Owner's Responsibilities**

a) The Owner has identified the Facility, and the District has determined that the Facility is suitable for use as a short-term evacuation site. The Owner will make the Facility available to the District as an evacuation site. Availability of the Facility will include use by the District, with advance notice, for no more than two evacuation drills conducted by the District on an annual basis (July 1 through June 30).
b) The Owner will designate a person and one or more alternates to serve as the Owner's contact/representative for the Facility in the event of a School evacuation by the District. The Owner will provide the District with the necessary phone numbers to reach the Owner's contact/representative.
c) The Owner will provide the District with access to the Facility during the school term in the event of a School evacuation. The Owner will provide the District with keys and/or access codes to exterior and interior doors needed to access the area(s) designated for use by the Owner in the event of an evacuation.
d) The Owner will provide an orientation of the Facility to designated District staff. The orientation will include how to access the area(s) designated for use by the District in the event of an evacuation, location of lights, restrooms, drinking water, and available tables/chairs.

3. **District's Responsibilities**

a) The School principal or designee will serve as the designated representative for the District in the event of an evacuation.
b) The School principal or designee will be responsible for keys and/or access codes for the Facility issued to the District by the Owner.
c) The School principal or designee will appoint an evacuation advance team that will be dispatched to the Facility ahead of students and staff. The advance team is responsible for readying the Facility for the arrival of students and staff being evacuated.
d) The District will make reasonable efforts to give advance notice to the Owner prior to arriving at the Facility in the event of an evacuation.
e) The District will only utilize area(s) in the Facility that the Owner has designated for use by the District.
f) The District is responsible for providing appropriate supervision of its students at the Facility during an evacuation.
g) To the extent permitted by law, the District agrees to indemnify, save and hold free and harmless, the Owner of the Facility, its officers, agents, representatives and employees from and against all claims, demands, loss, liability, cost or expense of any kind or nature whatsoever which the Owner, its officers, agents, representatives or employees or any of them may sustain or incur, or that may be imposed upon any of them, or injury to, or death of, persons or damages to the property arising out of, connected with, or attributable to use of the Facility by the District as an evacuation site. Notwithstanding the foregoing, this hold harmless and indemnification provision does not include claims, demands, loss, liability, cost, or expense of any kind or nature whatsoever arising from the negligent, intentional, or reckless acts of the Owner, its employees, officers, agents, or representatives. Nothing herein is intended or shall

be construed as a waiver of defenses or immunities (including the limitation of Wis. Stat. § 893.80) available under the law which the District is entitled to raise.

h) The District will add the Owner as an "additional insured" on the District's General Liability Insurance Policy. The District shall provide the Owner with a Certificate of Insurance on an annual basis to verify coverage. The policy shall include personal injury and property damage coverage. Nothing herein is intended or shall be construed as a waiver of defenses or immunities (including the limitation of Wis. Stat. § 893.80) available under the law which the District is entitled to raise.

i) The District will not pay any operational or administrative fees to the Owner for use of the Facility as an evacuation site.

j) The District agrees to reimburse the Owner, if requested, for all reasonable direct costs incurred by the Owner when the Facility is utilized by the District as an evacuation site.

k) In the event of an evacuation, the District shall provide any and all releases of information to the press and media. Requests for interviews or information submitted to the Owner or the Facility shall be directed to the District Administrator of the District. The District will make a reasonable effort to recognize the hospitality of the Owner and the Facility in any press or media releases pertaining to the re-location and sheltering of students and staff.

4. Term

This Agreement shall be in force and effect from the Effective Date through June 30, 2020 ("Initial Period"). The Agreement shall be renewed automatically following the Initial Period for subsequent one-year (July 1 through June 30) terms unless either party provides notice of termination to the other party in writing at least ninety (90) days prior to June 30.

Notice of termination shall be in writing and shall be deemed to have been duly given if delivered or mailed, by courier, by facsimile confirmed by U.S. first class mail, by registered mail, first class postage paid, return receipt requested, or any other delivery service with proof of delivery:

If to the Owner:
Sean Brusegar, Director CG Parks & Rec
Dublin Park
300 Dublin Circle
Cottage Grove, WI 53527

If to the District:
District Administrator
Monona Grove School District
5301 Monona Drive
Monona, WI 53716

5. Entire Agreement, Interpretation, Severability.

This Agreement contains the entire agreement between the Parties and supersedes all prior or contemporaneous agreements, negotiations and undertakings, whether oral or written, between the Parties relating to the subject matter of this Agreement. The language of all parts of this Agreement shall in all cases be construed as a whole, according to its fair meaning, and not strictly for or against either of the Parties. Invalidity of any provision of this Agreement shall not affect the validity of any other provisions. Nothing in this Agreement is intended to conflict with current laws or regulations of the United States of America, the State of Wisconsin, or local government. If a term of this Agreement is inconsistent with such authority, then that term shall be invalid, but the remaining terms and conditions of this Agreement shall remain in full force and effect.

6. Changes and Modifications; Binding Effect.

No waiver, amendment, release, or modification of this Agreement shall be binding unless evidenced in writing signed by both Parties or an authorized representative of both Parties. This Agreement shall be binding upon, and inure to the benefit of, the Parties and their successors and permitted assigns, but shall not be assignable, by operation of law or otherwise, by either of the Parties without the prior written consent of the other party.

7. Governing Law.

This Agreement shall be governed by and construed and enforced in accordance with the laws of the State of Wisconsin.

8. Section Headings.

The headings to the sections of this Agreement are solely for the convenience of the Parties and shall not be used to explain, modify, simplify, or aid in the interpretation of the provisions of this Agreement.

IN WITNESS WHEREOF, the Parties hereby acknowledge the foregoing as the terms and conditions of their understanding and have executed this Agreement or caused this Agreement to be duly executed by their authorized representative as of the day and year written below, but the Agreement shall take effect on the Effective Date.

Dublin Parl	Monona Grove School District
By: _____	By: _____
Sean Brusegar	Daniel W. Olson, Ed.D, Superintendent
Date: _____	Date: _____

ITEM 5

Sean Brusegar

From: Jill Nemoir
Sent: Thursday, January 2, 2020 11:06 AM
To: Sean Brusegar
Cc: Jill Nemoir
Subject: Thoughts on the Fitness Wall project

Follow Up Flag: Follow up
Flag Status: Completed

Dear Mr. Sean Brusegar,

I appreciate sending the letter with consideration for the fitness court that will impact where my lot backs up to this area.

I personally feel as if a 6-foot wall along with advertisements etc.and a fitness court seems as if it would be an awful eyesore and something that I would see looking out of my window. These lots and homes weren't cheap and therefore, adding some sort of fitness court with a 6-foot wall.

I don't know how the ultimate decision is made on what will happen but I would greatly appreciate understanding next steps because I'm passionate enough to be pretty loud on this as I do not think that this is in the best interest of the homeowners that see this out of back windows of our homes.

Thanks for reaching out and I look forward to hearing from you on how to proceed.

Sean Brusegar

From: Laura King
Sent: Monday, January 6, 2020 2:21 PM
To: Sean Brusegar
Subject: National Fitness Court

Follow Up Flag: Follow up
Flag Status: Flagged

Hi Sean,
I received your information on the National Fitness Court being proposed for behind my house. I took a look at the website and would be fine with that being installed. My only question or concern is if anyone will really use it or not. It looks like there are the options for classes being taught, and competitions to be held there. I think if that happened, more people would use it. If not, it may become a structure that doesn't have a purpose.

What are the other options for using the space? I know at the last meeting I attended there were several options brainstormed about, but I never really heard any more after that, until now. I think park benches for butterfly watching, gazebo, and grilling stations or fire pits were all brought up.

Thank you for keeping me in the loop.

Laura King

ITEM 7

Parks, Recreation & Forestry STAFF REPORT

MEMO DATE: January 9, 2020
MTG. DATE: January 16, 2020

TO: **Village of Cottage Grove Parks, Recreation & Forestry Committee**
CC:
FROM: **Sean Brusegar, CPRP Director of Parks, Recreation & Forestry**

RE: **July 1, 2020 Zoozort Live Animal Show at Northlawn Park**

BACKGROUND: See Attachment

OVERVIEW: Suspend ordinance 230-2 stating "Pets, including animals of any species, shall not be permitted in Village parks, except animals used to aid individuals with disabilities or as otherwise recommended by the Park and Recreation Committee and approved by the Village Board" for July 1st, 2020 from 12:00pm – 4:00pm at Northlawn Park to allow Dane County Library Services in conjunction with the Bookmobile, to contract with Zoozort to present the "Zoozort Live Animal Show".

STAFF RECOMMENDATION: Suspend ordinance 230-2 from 12:00pm – 4:00pm on July 1st at Northlawn Park.

Zoozort is a wildlife company specializing in entertaining and educational wildlife shows... a hands-on interactive program that features live exotic animals from all around the world.

A licensed animal exhibitor will show 7 animals, for a 45-minute program, teaching the children about the educational program you have chosen. The handler takes out one animal at a time, giving fun & interesting facts about the animal, then bringing it around for everyone to pet. Volunteers are chosen to help with special activities. Children are having so much fun; they don't even realize they are learning.

Some of the animals we could see:

Kookaburra
Bearded Dragons
Caledonian Giant Gecko
Tegu
Python
Hissing Roaches
Spur Thigh Tortoise
African Bull Frog
Giant Marine Toad
Chameleon
Chinchilla
Fennec Fox
Armadillo
Kinkajou
Skunk
Wallaby

ITEM 8

Parks, Recreation & Forestry STAFF REPORT

MEMO DATE: January 9, 2020
MTG. DATE: January 16, 2020

TO: Village of Cottage Grove Parks, Recreation & Forestry Committee
CC:
FROM: Sean Brusegar, CPRP - Director of Parks, Recreation & Forestry

RE: Suspending Alcohol in the Parks and Allowing for Sound Amplification for Music In The Grove Events.

BACKGROUND:

To allow alcohol (beer & wine only) at Music In The Grove events. The request would cover the dates of May 28th, June 11th, July 9th, July 23rd, August 6th, August 13th & August 27th. All events would be at Dublin Park. Would be seeking a sound amplification permit for the same dates from 6:00pm – 8:00pm.

STAFF RECOMMENDATION:

Staff recommends suspending Ordinance 109-28 to allow for sound amplification and alcohol to be consumed in Dublin Park on dates and times mentioned previously.

ITEM 9

Parks, Recreation & Forestry STAFF REPORT

MEMO DATE: January 9, 2020
MTG. DATE: January 16, 2020

TO: Village of Cottage Grove Parks, Recreation & Forestry Committee
CC:
FROM: Sean Brusegar, CPRP - Director of Parks, Recreation & Forestry

RE: TDS Contract for Service at Bakken Park

BACKGROUND:

In 2020, a shelter and a splash pad will be constructed at Bakken Park. With the construction of this shelter, security cameras to monitor the shelter and splash pad will be included. We would like to be able to monitor the cameras remotely. In order to do that, an internet connection must be provided. TDS will bring service into Bakken Park at no charge. The Village will need to enter into a contract with TDS for a monthly charge of $109.00. This will minimally affect the 2020 budget. Likely to be only for 2 months. The 2021 budget will include an increase for the service.

STAFF RECOMMENDATION:

Staff recommends entering into a contract with TDS for internet service at Bakken Park.

Quote

12/16/2019

Customer Information - Service Address	Account Number:
Ordered by: Sean Brusegar	Main Yellow Page Heading: Parks and Recreation
Business Name: Village of Cottage Grove-Bakken Park	Phone: 608-839-8968
Street: 2601 Clark St.	Email: sbrusegar@village.cottage-grove.wi.us
Flr/Rm/Suite:	
City, State, Zip: Cottage Grove, WI 53527	
TDS Sales Representative: Dana Peterson	608-824-7702

Monthly Services Charges/Credits:

Quantity	Term	Description	Price each	Total
1	36 Month	150M x 150M Symmetrical - (PON) - Data Only	$169.00	$169.00
1	Mo To Mo	Single Static IP	$10.00	$10.00
1	24 Month	2019 2 YR HSI Promotion - FLEX	-$70.00	-$70.00

***Total Monthly Services Charges/Credits: $109.00**

One Time Charges/Credits:

Quantity	Term	Description	Price each	Total
1	One Time	Service Order Charge	$20.00	$20.00
1	One Time	Service Order Charged - Waived	-$20.00	-$20.00
1	One Time	HSI Installation Fee	$150.00	$150.00
1	One Time	HSI Installation Fee - Waived	-$150.00	-$150.00
1	One Time	Modem Shipping & Handling Fee	$14.95	$14.95

***Total One Time Charges/ Credits: $14.95**

- managedIP SIP and PRI locations must have a minimum of
trunks. If a location falls below the minimum requirement, the service will be canceled and cancellation charges will apply.
- *Total does not include applicable taxes, fees, assessments or surcharges. Additional Directory Listing charges may also apply and are not include in the Totals herein. Local usage charges apply if applicable.
- Customer is responsible for cancellation of services with current providers.
- If Customer has an active alarm line, Customer must advise alarm company of change of service.
- TDS reserves the right to block high fraud international long distance locations.
- For managedIP Hosted (managed deployment) and managedIP Trunking, if Services ordered necessitate that TDS dispatches a technician to Customer's premise, Customer will be notified of the visit in advance. It is required that a Customer representative is on site when the technician arrives and that full access to the telecommunication's closet be provided. In addition, the Customer must ensure that prior to the installation visit, the site is ready with a rack, mounting board or shelf to house TDS equipment and that four unoccupied AC outlets are available within four feet of the equipment. If any of the forgoing conditions are not met, TDS may charge the Customer a $250.00 fee.

Terms and Conditions:

https://tdsbusiness.com/terms-of-service.html

Quote created using Version 2019 V1.7. Pricing and products on this quote are good for 30 days only. TDS reserves the right to change products and pricing after 30 days.

ITEM 12

Village of Cottage Grove

PARKS, RECREATION and FORESTRY COMMITTEE
Meeting Minutes for Thursday November 21, 2019

1. **Call to order meeting at Municipal Services Building.** The meeting was called to order by Heidi Murphy at 6:30 pm.

2. **Roll call and confirm that the meeting was properly posted.**
It was determined that a quorum was present, and that the agenda had been properly posted. Present for the meeting were Heidi Murphy (chair), Jay Kiefer and Jennifer Pickel. Kevin Laufenberg and Penny Aguilera were absent and excused. Also present were Parks, Recreation and Forestry Director Sean Brusegar, Parks and Recreation Administrative Assistant Kristen Krause and Village Forester James Rothman.

3. **Public appearance: Public's opportunity to speak about any subject that is not a specific agenda item.**
No public appearances.

4. **Discuss the tree planting on Highway N.**
Village Forester James Rothman spoke to the committee regarding the recent request to plant trees along the new bike path on Hwy N, between Parkview Street and Northlawn Drive. Rothman's main concerns were with visual obstruction. He said that planting trees between Parkview Street and Northlawn Drive would hinder visibility for motorists pulling out onto Hwy N. Utilities, snow plowing and damage to the new asphalt bike path were some other issues he said would be complicated with the planting of trees in the terrace. At this time, Rothman said that both he and the Public Works Department are recommending that no trees are planted by the new stretch of bike path along Hwy N. Brusegar said that the committee can revisit the planting of trees after the next stretch of bike path is completed. **Motion** by Pickel, seconded by Kiefer, to recommend not planting trees along Hwy N next to the new bike path at this time under the advisement of the Village Forester and revisit the option to plant trees once the entire bike path is complete. Motion carried with a unanimous voice vote of 3-0-0.

5. **Discuss taking Bakken Park soccer fields offline for 2020.**
Brusegar is recommending that the Bakken Park soccer fields are taken offline for the entirety of 2020 for repairs and maintenance. Committee members agreed that this is needed and asked that Brusegar update the rugby club, lacrosse club and soccer club about the fields being taken offline for next year. **Motion** by Pickel, seconded by Kiefer, to take Bakken Park soccer fields offline for all of 2020. Motion carried with a unanimous voice vote of 3-0-0.

6. **Discuss National Fitness Campaign in 4th Addition to Westlawn.**
Brusegar explained that the Village has received a $30,000 grant to be disbursed in 2021 towards the construction of a fitness court in the 4th Addition to Westlawn neighborhood. The National Fitness Group that is responsible for getting fitness courts in communities across the nation, liked the location of the proposed fitness court in Cottage Grove. The group needs a proclamation from the Village by January that lists the amount the Village will match in funds, to those that are fundraised or sponsored, for the remaining $80,000 to $90,000. Brusegar

emphasized that the Village match of funds listed in the proclamation is non-binding. He recommended an amount of $50,000 to show the fitness group that the Village is serious about pursuing the fitness court. He also stated that fundraising and sponsorship are a big part of funding a fitness court. Committee members discussed the proposed location between houses on Red Hawk Trail and Mourning Dove Drive. Murphy also mentioned the 1-acre park in the neighborhood as a possible location. The committee thought it best to first reach out to the homeowners that would back up to the fitness court at its initial proposed location between Red Hawk and Mourning Dove and ask for their input. **Motion** by Pickel, seconded by Murphy, to recommend putting $50,000 for the local match contribution amount in the proclamation to the National Fitness Campaign. Motion carried with a unanimous voice vote of 3-0-0.

7. **Discuss Cottage Grove School PTO request for a gift certificate.**
   The Cottage Grove School PTO is seeking prizes to award during a jog-a-thon event for students and requested a donation in the form of a gift certificate for a specific amount or rec program. Brusegar recommended a gift certificate in the amount of $50. **Motion** by Pickel, seconded by Kiefer, to recommend and approve a gift certificate in the amount of $50 to be given as a donation to Cottage Grove School Jog-a-Thon. Motion carried with a unanimous voice vote of 3-0-0.

8. **Update on the budget.**
   The budget was approved without any changes and Program Coordinator Sam Frederickson will be full-time as of January 1, 2020.

9. **Update on Bakken Park shelter and splash pad.**
   The shelter and splash pad will break ground in 2020, with a completion and opening in 2021. Soil borings have been completed at Bakken Park for both projects. Wood chips have been laid on the ground where the shelter and splash pad will be constructed to help keep the ground warmer in preparation for spring construction. Splash pad components will be purchased prior to January 1, before prices increase. Brusegar also showed committee members the latest renderings of the shelter and splash pad designs. At this time, Brusegar is working on picking out amenities (garbage barrels, benches, drinking fountain, etc.). There will be a meeting on December 11 to go over the final designs.

10. **Parks and Recreation Director's Report.**
    Numbers have been good for programs/events that have recently occurred or are occurring in the near future. The recent Youth Sewing class had 7 of 8 spots filled for its October session. More sewing classes will be added in the future. With 12 kids enrolled, the Babysitting class maxed out right away. The new Chess League had 8 participants at Taylor Prairie and 12 at Cottage Grove School. Brick Builders (aka STEM) for grades 2nd – 4th had 8 participants enrolled. Another class that maxed out was the GDS Coding and Maker Club that began on November 5 and maxed out at 20 students. The spring session of this club is already half full. The senior Stepping on Falls Prevention class had 12 out of 15 spots filled. The new Cookie Decorating class maxed out within a couple of hours with 12 adults for the first class and 15 adults for the second class which will be held at Oakstone Recreation. Paint and Sip at Door Creek Golf Course recently had 15 participants for the Country Scarecrow and there are 15 enrolled in the December 12 Let it Snow Paint and Sip at the Oaks Golf Course. In October, the Touch-a-Truck event had 22 vehicles present for its first year. There was a consistently full

parking lot at Cottage Grove School where the event was held from 10am-12pm. This event will continue annually. On November 16, the annual Thanksgiving Turkey Shoot was held and had 80 participants. 10 turkeys were given away, with Piggly Wiggly sponsoring five of the turkeys and the CG Parks & Recreation Department sponsoring the other five. Another new event this year is the Santa on the Line. Cottage Grove Lions Club members are the helping with the calls and will call children who sign-up online. Pizza Hut is sponsoring the pizza for the Santas. This event is for children age 2-10.

Pickleball courts are being considered for Community Park. Brusegar asked for committee interest in these courts and it was all positive. The new shelter at Bakken Park has been approved and Brusegar would like to see a professionally made plaque installed that would list the committee members, Village Board members and staff that were responsible for helping make the shelter possible. The committee was receptive to this idea.

Brusegar asked the committee to consider when and how they would like the grand opening of the Bakken Park shelter and splashpad to happen. He also wanted them to start thinking about possibly delaying new reservations in 2021 and what the new costs for reserving the shelter will be.

11. Approve the minutes of the September 19, 2019 meeting.

Motion by Pickel, seconded by Kiefer, to approve the minutes from the September 19, 2019 meeting as presented. Motion carried with a voice vote of 3-0-0.

12. Future Agenda Items

- Discuss MG Soccer Club agreement and field reservations 5th Addition to Westlawn Master Plan.
- Update on Bakken Park shelter and splashpad
- The next PRFC meeting is scheduled for **Thursday, January 16, 2019 at 6:30 pm**.

13. Adjournment.

Motion by Pickel, seconded by Murphy, to adjourn the meeting at 7:50 pm. Motion carried with a voice vote of 3-0-0.

Respectfully submitted by Kristen Krause, Utility Clerk.
Approved on: ___

These minutes represent the general subject matter discussed in this meeting but do not reflect a verbatim discussion of the subjects and conversations that took place.

DEER-GROVE EMS COMMISSION MEETING
Deerfield Village Hall
4 N. Main Street, Deerfield, WI 53531
Thursday, January 16, 2020
6:30 P.M.

AGENDA

1. Call to Order.
2. Public Appearances: The public's opportunity to speak to the commission about any item not on the agenda.
3. Approval of minutes from previous meeting(s).
4. Discuss and consider approval of December Financial Reports.
5. Discuss and consider approval of Bills for Budgeted/Approved Expenses.
6. Discuss and consider approval of Write Offs and Aging of Accounts.
7. Staff Report.
8. Correspondence.
9. Discuss and consider interfacility billing rates.
10. Discuss and consider agreement with MTM for Medicaid payment of interfacility transfers.
11. Discuss and consider continued collaborative response agreement with Marshall EMS.
12. Consider/Adopt motion to move into closed session pursuant to Wis. Stat. §19.85(1)(c) for the purpose of considering employment, promotion, compensation or performance evaluation data of any public employee over which the governmental body has jurisdiction or exercises responsibility: for the purpose of the yearly performance review of the Chief.
13. Consider/Adopt motion to reconvene to open session and to take any action necessary from closed session.
14. Agenda items for next commission meeting.
15. Adjournment.

****ANY ITEM IS SUBJECT FOR ACTION****

By: Troy Allen, Commission Chairperson Submitted January 10, 2020

It is possible that members of and a possible quorum of members of other governmental bodies of the municipalities may be in attendance at the above-stated meeting to gather information; no action will be taken by any other governmental body at the above-stated meeting other than the governmental body specifically referred to above in this notice.

Please Note: Upon reasonable notice, efforts will be made to accommodate the needs of disabled individuals through appropriate aids and services. For additional information or to request this service, contact the Deer-Grove EMS Chief at 608-839-5658.

DEER-GROVE EMS COMMISSION MEETING
COTTAGE GROVE EMERGENCY SERVICES BUILDING
THURSDAY, DECEMBER 19, 2019
Minutes

Present: Kris Hampton, Troy Allen, Greg Frutiger, Kristi Williams, Gary Wieczorek and John Williams.

Also present: Chief Eric Lang and Office Manager Mandy Cysiewski

Allen called the meeting to order at 6:30 p.m.

Public Appearances: None.

Approval of minutes from previous meeting: Motion by K. Williams/Frutiger to approve the minutes from the November 21, 2019 meeting with the only change being the addition of Kristi Williams' name to the present list. Motion carried 5-0 (J. Williams abstained).

Discuss and Consider approval of the November Financial Reports: Motion by Hampton/K. Williams to approve the November financial reports as presented. Motion carried 6-0.

Discuss and Consider approval of Bills for Budgeted/Approved Expenses: Hampton questioned the VBM Medical charge. Chief Lang stated it was a new piece of equipment to go along with the Vividtrac airway placement tool. Frutiger questioned the Stryker charge. Chief Lang stated this was for M81's cot as it is not part of the Stryker maintenance contract. Motion by Hampton/Wieczorek to approve payment of the bills as presented. Motion carried 6-0.

Discuss and Consider approval of Write Offs and Aging of Accounts: Motion by K. Williams/J. Williams to approve the aging of accounts as presented. Motion carried 6-0. There were no write-off requests.

Staff Report: There were 63 calls in November, including 8 missed calls. This is down from 89 calls in the same month last year. Volunteers provided 552 hours in November, up from 483 hours in the previous month and down from 735 hours during November 2018. In addition to what is in the written report, Chief Lang reported the following:

- Five new volunteers have been added in December and will reflect on the report in January. Along with the new volunteers, two LTEs and one volunteer resigned their positions due to outside commitments. All left the service in good standing and if they chose to come back they would be allowed back without going through the interview process.
- A core hiring committee has been created to address applicants on a regular basis. Chief Lang stated he found applicant engagement quickly decreases if they are not interviewed within a relatively short period of time.
- The quote for M80s repairs was received and will be just over $13k. Chief Lang stated this includes work done by MadWraps.
- There will be another Narcan drill with Deerfield Schools in January. Chief Lang stated he would like to have the fire department involved and have the DGEMS crew respond from the Town of Cottage Grove to give the school staff a feeling for what it could be like.

Correspondence: Chief Lang passed around a large thank you note from the Scouts.

Update on Inter-facility transports with Stoughton Hospital: Chief Lang stated interfacility transports are still in progress. He stated there will likely be a couple agenda items in January to address an agreement with Medical Transport Management (MTM) and BLS billing rates. Chief Lang reached out to the Stoughton Hospital ER Director and they have a plan to meet in early January.

Discuss chief review instructions for January meeting: Office Manager Cysiewski passed out new evaluation rubric. Chairman Allen requested an electronic version be sent as another option. Chief Lang stated he will send it to all commission members. Office Manager Cysiewski requested all reviews be returned to her no later than

January 6th so she has time to compile for the January 16th meeting. Chief Lang will also complete a self-review and submit it to the commission prior to the January meeting.

Set next commission meeting date and location: The next meeting will be held on Thursday, January 16, 2020 at the Deerfield Village Hall beginning at 6:30 P.M.

Agenda items for next commission meeting: Update on inter-facility with Stoughton Hospital, chief review, Marshall collaborative response.

Adjournment: Motion by Hampton/K. Williams to adjourn. Motion carried 6-0. The meeting ended at 7:16 P.M.

Submitted by Mandy Cysiewski

Deer Grove EMS District
Profit & Loss Budget vs. Actual
January through December 2019

	Jan - Dec 19	Budget	$ Over Budget	% of Budget	Jan - Dec 18
Ordinary Income/Expense					
Income					
230 · Training Center Income	4,098.00	2,500.00	1,598.00	163.92%	8,452.00
300 · Special Event Fee	6,300.00	2,000.00	4,300.00	315.0%	3,735.00
4999 · Uncategorized Income	2,537.33				1,100.61
610 · Town/Villages Assesments	519,772.55	519,772.55	0.00	100.0%	499,615.55
620 · Ambulance Run Fees	627,783.63	496,960.00	130,823.63	126.33%	633,027.97
630 · Contracted Revenue	65,423.70	65,267.45	156.25	100.24%	58,744.93
639 · FAP Funds Received	6,241.77				5,552.45
640 · Interest Earned	822.14	500.00	322.14	164.43%	588.57
650 · Grant Revenue	1,000.00				1,000.00
693 · Donations	25,038.84	25,000.00	38.84	100.16%	150.00
694 · Proceeds from sale of equip.	943.86				0.00
999 · Insurance Reimbursement	18,295.96				3,245.95
Total Income	1,278,257.78	1,112,000.00	166,257.78	114.95%	1,215,213.03
Gross Profit	1,278,257.78	1,112,000.00	166,257.78	114.95%	1,215,213.03
Expense					
6140 · Credit Card Fees	398.47				
720 · Wages	435,471.55	472,700.00	-37,228.45	92.12%	416,792.03
721 · Health Insurance	123,573.76	113,140.00	10,433.76	109.22%	111,544.95
722 · Workmans Comp	11,110.00	32,140.00	-21,030.00	34.57%	35,613.35
723 · Retirement Plan	56,477.31	50,950.00	5,527.31	110.85%	55,679.14
724 · Employers FICA Expense	43,642.55	45,610.00	-1,967.45	95.69%	43,007.03
725 · Staff Continuing Education	5,982.55	9,000.00	-3,017.45	66.47%	3,905.86
726 · Travel/Mileage Reimbursement	202.61	500.00	-297.39	40.52%	155.22
728 · Medical Director Fee	6,000.00	6,000.00	0.00	100.0%	6,000.00
734 · Overtime	123,000.22	107,850.00	15,150.22	114.05%	124,704.26
735 · EMT Stipend	19,296.00	25,000.00	-5,704.00	77.18%	26,706.00
736 · LifeQuest Billing	42,931.20	42,000.00	931.20	102.22%	41,764.02
740 · Office Equipment (expense)	1,003.31	1,630.00	-626.69	61.55%	1,221.96
742 · Office Supplies	1,755.82	2,000.00	-244.18	87.79%	1,132.00
770 · Communications	5,801.24	6,000.00	-198.76	96.69%	6,525.35
775 · IT expenses	8,569.82	6,850.00	1,719.82	125.11%	5,876.13
790 · Publicity and Advertising	1,835.49	2,000.00	-164.51	91.78%	1,846.18
791 · Training Center Expense	1,502.86	2,000.00	-497.14	75.14%	4,596.00
810 · EMT Recognition	2,050.90	2,500.00	-449.10	82.04%	2,038.15
820 · EMT Continuing Education	1,314.00	5,000.00	-3,686.00	26.28%	3,145.00
825 · Chief Continuing Education	1,498.65	1,500.00	-1.35	99.91%	1,303.03
829 · Vehicle Maintenance	27,869.51	10,375.00	17,494.51	268.62%	6,306.12
831 · Fuel	14,213.21	14,000.00	213.21	101.52%	15,251.63
840 · Equipment/Non-Disposable	4,890.85	62,300.00	-57,409.15	7.85%	6,167.62
842 · Equipment Maintenance	3,571.41	3,600.00	-28.59	99.21%	2,483.57
845 · Capital Purchase	64,002.94				28,030.60
850 · Medical Supplies	38,204.69	40,995.00	-2,790.31	93.19%	35,544.40
852 · Training Medical Supplies	0.00	1,000.00	-1,000.00	0.0%	192.32
860 · Clothing	13,472.06	12,900.00	572.06	104.44%	7,574.88
870 · Insurance	10,244.00	8,600.00	1,644.00	119.12%	9,037.00
871 · Group Life Insurance	666.77	700.00	-33.23	95.25%	560.66
872 · Unemployment Insurance	50.00	4,000.00	-3,950.00	1.25%	0.00
878 · Community Medic Program	89.09	310.00	-220.91	28.74%	0.00
879 · Health Maintenance & Safety	1,771.79	1,500.00	271.79	118.12%	120.26
880 · Legal Fees	4,582.00	5,000.00	-418.00	91.64%	5,095.00
881 · Accounting Fees	8,000.00	7,650.00	350.00	104.58%	7,350.00
885 · Overdue Run Fees	116,084.01				146,258.68
898 · Building and Grounds	2,823.97	3,500.00	-676.03	80.69%	2,792.30
899 · Miscellaneous Expenses	1,146.86	1,200.00	-53.14	95.57%	1,336.07
Total Expense	1,205,101.47	1,112,000.00	93,101.47	108.37%	1,167,656.77
Net Ordinary Income	73,156.31	0.00	73,156.31	100.0%	47,556.26

Deer Grove EMS District
Profit & Loss Budget vs. Actual
January through December 2019

	Jan - Dec 19	Budget	$ Over Budget	% of Budget	Jan - Dec 18
Other Income/Expense					
Other Income					
691 · Unassigned Funds Applied	0.00	0.00	0.00	0.0%	0.00
692 · FAP funds Allocated	0.00	0.00	0.00	0.0%	0.00
9010 · Debt Service Assessment	0.00	0.00	0.00	0.0%	0.00
Total Other Income	0.00	0.00	0.00	0.0%	0.00
Other Expense					
1030 · Debt Service	0.00	0.00	0.00	0.0%	0.00
1099 · Reportable Health Coverage	0.00	0.00	0.00	0.0%	0.00
Total Other Expense	0.00	0.00	0.00	0.0%	0.00
Net Other Income	0.00	0.00	0.00	0.0%	0.00
Net Income	73,156.31	0.00	73,156.31	100.0%	47,556.26

Deer Grove EMS District
Balance Sheet
As of December 31, 2019

		Dec 31, 19
ASSETS		
Current Assets		
Checking/Savings		294,499.88
Accounts Receivable		
1200 · Accounts Receivable		578.30
1210 · Lifequest Receivables		160,013.39
Total Accounts Receivable		160,591.69
Other Current Assets		995.00
Total Current Assets		456,086.57
Fixed Assets		604,794.75
Other Assets		
112 · Allowance for Doubtful Accounts		-78,376.75
Total Other Assets		-78,376.75
TOTAL ASSETS		**982,504.57**
LIABILITIES & EQUITY		
Liabilities		
Current Liabilities		
Accounts Payable		1,884.06
Credit Cards		77.00
Other Current Liabilities		
Lifequest Deposit Adjustments		0.12
Member Reimbursements Payable		489.99
Payroll Liabilities		7,414.58
231 · Deferred Run Revenue		63,554.06
232 · Town/Village Pre-payments		6,168.29
Total Other Current Liabilities		77,627.04
Total Current Liabilities		79,588.10
Total Liabilities		79,588.10
Equity		
1110 · Retained Earnings		6,838.31
380 · Fund Balance-Unrestricted		205,912.00
381 · Fund Balance-Restricted (FAP)		
Aids & Training	4,463.03	
EMT Basic Training	7,751.93	
Total 381 · Fund Balance-Restricted (FAP)		12,214.96
383 · Investment in Fixed Asset		604,794.89
Net Income		73,156.31
Total Equity		902,916.47
TOTAL LIABILITIES & EQUITY		**982,504.57**

Deer Grove EMS District
Bill Payment Detail
December 2019

	Num	Type	Date	Name	Memo	Account	Original Amount	Paid Amount
	20838	Check	12/02/2019	Antoniewicz, Lisa M	Clothing Reimbursement	101 · Operating Checking	-200.00	
					Clothing Reimbursement	Member Reimbursements Payable	200.00	-200.00
TOTAL							200.00	-200.00
	EFT	Liability Check	12/06/2019	Bank of Deerfield		101 · Operating Checking	-16,669.34	
						Direct Deposit Liability	15,969.34	-15,969.34
						Direct Deposit Liability	700.00	-700.00
TOTAL							16,669.34	-16,669.34
	20847	Liability Check	12/06/2019	Fire Fighters Local 311		101 · Operating Checking	-217.16	
						Local 311 Dues	217.16	-217.16
TOTAL							217.16	-217.16
	20839	Bill Pmt -Check	12/03/2019	Bound Tree Medical, LLC	Epi	101 · Operating Checking	-105.40	
	83420621	Bill	11/20/2019		Epi	850 · Medical Supplies	105.40	-105.40
TOTAL							105.40	-105.40
	20840	Bill Pmt -Check	12/03/2019	Galls		101 · Operating Checking	-327.40	
	014235445	Bill	11/12/2019		Hat	860 · Clothing	46.95	-46.95
	014300619	Bill	11/19/2019		Jacket-Lisa	860 · Clothing	280.45	-280.45
TOTAL							327.40	-327.40
	20841	Bill Pmt -Check	12/03/2019	Life-Assist, Inc.		101 · Operating Checking	-1,110.25	
	958542	Bill	11/25/2019		BP Cuffs	850 · Medical Supplies	153.59	-153.59
	958302	Bill	11/25/2019		Misc Med Supplies	850 · Medical Supplies	956.66	-956.66
TOTAL							1,110.25	-1,110.25
	20842	Bill Pmt -Check	12/03/2019	New Glarus Motors	M78 Oil Change	101 · Operating Checking	-437.79	
	01203	Bill	11/19/2019		M78 Oil Change	829 · Vehicle Maintenance	437.79	-437.79
TOTAL							437.79	-437.79
	20843	Bill Pmt -Check	12/03/2019	Pomasl Fire Equipment	Light/Latch	101 · Operating Checking	-51.00	
	79672	Bill	11/22/2019		Light/Latch	829 · Vehicle Maintenance	51.00	-51.00
TOTAL							51.00	-51.00
	20844	Bill Pmt -Check	12/03/2019	US Bank		101 · Operating Checking	-5,750.40	
		Bill	12/02/2019			One Card - Eric Lang	908.92	-908.92

Deer Grove EMS District
Bill Payment Detail
December 2019

	Num	Type	Date	Name	Memo	Account	Original Amount	Paid Amount
		Bill	12/02/2019			One Card - Lisa Antoniewicz	995.75	-995.75
		Bill	12/02/2019			One Card - Mandy Cysiewski	2,410.70	-2,410.70
		Bill	12/02/2019			One Card - Office Use Only	1,435.03	-1,435.03
TOTAL							5,750.40	-5,750.40
	20845	Bill Pmt -Check	12/03/2019	WEX Bank	Nov Fuel	101 · Operating Checking	-234.18	
	62586964	Bill	11/30/2019		Nov Fuel	831 · Fuel	234.18	-234.18
TOTAL							234.18	-234.18
	20846	Bill Pmt -Check	12/03/2019	ZOLL Medical Corporation	CPR Stat Padz	101 · Operating Checking	-240.69	
	2973365	Bill	11/22/2019		CPR Stat Padz	850 · Medical Supplies	240.69	-240.69
TOTAL							240.69	-240.69
	EFT	Liability Check	12/06/2019	Wisconsin Deferred Compensation	98971-01	101 · Operating Checking	-430.00	
					98971-01	WI Deferred Comp Liability	280.00	-280.00
					98971-01	WI Deferred Comp Liability	150.00	-150.00
TOTAL							430.00	-430.00
	EFT	Liability Check	12/10/2019	EFTTPS	39-1293690	101 · Operating Checking	-5,765.70	
					39-1293690	224 · FICA/Fed Payable	2,115.00	-2,115.00
					39-1293690	2242 · FICA/Fed Payable-ER	1,479.38	-1,479.38
					39-1293690	2241 · FICA/Fed Payable-EE	1,479.38	-1,479.38
					39-1293690	2242 · FICA/Fed Payable-ER	345.97	-345.97
					39-1293690	2241 · FICA/Fed Payable-EE	345.97	-345.97
TOTAL							5,765.70	-5,765.70
	EFT	Liability Check	12/13/2019	Wisconsin Department of Revenue	036-0000519180-02	101 · Operating Checking	-1,031.74	
					036-0000519180-02	225 · State Withholding	1,031.74	-1,031.74
TOTAL							1,031.74	-1,031.74
	20848	Liability Check	12/17/2019	Minnesota Life Insurance Company	2832-GL	101 · Operating Checking	-140.38	
					2832-GL	Additional	56.10	-56.10
					2832-GL	Basic	57.78	-57.78
					2832-GL	Spouse/Dependent	10.50	-10.50
					2832-GL	Supplemental	16.00	-16.00
TOTAL							140.38	-140.38
	EFT	Liability Check	12/20/2019	Employee Trust Funds	5300000	101 · Operating Checking	-11,778.38	
					5300000	Health Insurance Liability - ER	10,414.76	-10,414.76
					5300000	Health Insurance Liability - EE	1,363.62	-1,363.62

Deer Grove EMS District
Bill Payment Detail
December 2019

	Num	Type	Date	Name	Memo	Account	Original Amount	Paid Amount
TOTAL							11,778.38	-11,778.38
	20849	Liability Check	12/18/2019	Delta Dental		101 · Operating Checking	-136.24	
						224 · FICA/Fed Payable	136.24	-136.24
TOTAL							136.24	-136.24
	EFT	Liability Check	12/19/2019	Aflac	MCY18	101 · Operating Checking	-246.76	
					MCY18	Aflac	246.76	-246.76
TOTAL							246.76	-246.76
	EFT	Liability Check	12/20/2019	Bank of Deerfield		101 · Operating Checking	-15,075.98	
						Direct Deposit Liability	14,375.98	-14,375.98
						Direct Deposit Liability	700.00	-700.00
TOTAL							15,075.98	-15,075.98
	20862	Liability Check	12/20/2019	Fire Fighters Local 311		101 · Operating Checking	-213.70	
						Local 311 Dues	213.70	-213.70
TOTAL							213.70	-213.70
	EFT	Liability Check	12/20/2019	Wisconsin Deferred Compensation	98971-01	101 · Operating Checking	-430.00	
					98971-01	WI Deferred Comp Liability	280.00	-280.00
					98971-01	WI Deferred Comp Liability	150.00	-150.00
TOTAL							430.00	-430.00
	EFT	Liability Check	12/23/2019	EFTTPS	39-1293690	101 · Operating Checking	-5,930.38	
					39-1293690	224 · FICA/Fed Payable	2,290.00	-2,290.00
					39-1293690	2242 · FICA/Fed Payable-ER	1,475.20	-1,475.20
					39-1293690	2241 · FICA/Fed Payable-EE	1,475.20	-1,475.20
					39-1293690	2242 · FICA/Fed Payable-ER	344.99	-344.99
					39-1293690	2241 · FICA/Fed Payable-EE	344.99	-344.99
TOTAL							5,930.38	-5,930.38
	EFT	Liability Check	12/30/2019	Employee Trust Funds	5300000	101 · Operating Checking	-7,173.06	
					5300000	2272 · Employer Share WRS	4,452.51	-4,452.51
					5300000	2271 · Employee Share WRS	2,720.55	-2,720.55
TOTAL							7,173.06	-7,173.06
	EFT	Liability Check	12/30/2019	Wisconsin Department of Revenue	036-0000519180-02	101 · Operating Checking	-1,055.57	
					036-0000519180-02	225 · State Withholding	1,055.57	-1,055.57

Deer Grove EMS District
Bill Payment Detail
December 2019

	Num	Type	Date	Name	Memo	Account	Original Amount	Paid Amount
TOTAL							1,055.57	-1,055.57
	20850	Bill Pmt -Check	12/18/2019	AED Superstore	Pump spray lubricant	101 · Operating Checking	-44.32	
	1526586	Bill	12/06/2019		Pump spray lubricant	791 · Training Center Expense	44.32	-44.32
TOTAL							44.32	-44.32
	20851	Bill Pmt -Check	12/18/2019	Engraving & Trophy Specialists, Inc	Member Plaques	101 · Operating Checking	-237.50	
	59659	Bill	12/04/2019		Member Plaques	810 · EMT Recognition	237.50	-237.50
TOTAL							237.50	-237.50
	20852	Bill Pmt -Check	12/18/2019	Ferno-Washington Inc.	3 newborn restraints	101 · Operating Checking	-1,413.39	
	857829	Bill	12/12/2019		3 newborn restraints	850 · Medical Supplies	1,413.39	-1,413.39
TOTAL							1,413.39	-1,413.39
	20853	Bill Pmt -Check	12/18/2019	Forward Pharmacy	Lorazepam/Midazolam	101 · Operating Checking	-90.00	
		Bill	11/30/2019		Lorazepam/Midazolam	850 · Medical Supplies	90.00	-90.00
TOTAL							90.00	-90.00
	20854	Bill Pmt -Check	12/18/2019	Landmark Services Cooperative	Nov Fuel	101 · Operating Checking	-705.85	
		Bill	11/30/2019		Nov Fuel	831 · Fuel	705.85	-705.85
TOTAL							705.85	-705.85
	20855	Bill Pmt -Check	12/18/2019	Life-Assist, Inc.		101 · Operating Checking	-118.90	
	958625	Bill	11/26/2019		Amiodarone	850 · Medical Supplies	4.90	-4.90
	959337	Bill	12/02/2019		Quelicin	850 · Medical Supplies	114.00	-114.00
TOTAL							118.90	-118.90
	20856	Bill Pmt -Check	12/18/2019	MATC - EMS Programs	CPR/ACLS cards	101 · Operating Checking	-135.00	
	PS-123	Bill	12/11/2019		CPR/ACLS cards	791 · Training Center Expense	135.00	-135.00
TOTAL							135.00	-135.00
	20857	Bill Pmt -Check	12/18/2019	McFarland Fire & Rescue	Ice Rescue Course	101 · Operating Checking	-50.00	
		Bill	12/17/2019		Ice Rescue Course	810 · EMT Recognition	50.00	-50.00
TOTAL							50.00	-50.00
	20858	Bill Pmt -Check	12/18/2019	O'Reilly Auto Parts		101 · Operating Checking	-49.23	
	4331-321690	Bill	12/12/2019			829 · Vehicle Maintenance	49.23	-49.23
TOTAL							49.23	-49.23

Deer Grove EMS District
Bill Payment Detail
December 2019

	Num	Type	Date	Name	Memo	Account	Original Amount	Paid Amount
	20859	Bill Pmt -Check	12/18/2019	Personnel Evaluation Inc.	New Vol Eval	101 · Operating Checking	-36.00	
	34891	Bill	11/30/2019		New Vol Eval	899 · Miscellaneous Expenses	36.00	-36.00
TOTAL							36.00	-36.00
	20860	Bill Pmt -Check	12/18/2019	Stoddard's Country Grove Market	Meal for HATS OFF	101 · Operating Checking	-854.91	
	74347	Bill	12/07/2019		Meal for HATS OFF	810 · EMT Recognition	854.91	-854.91
TOTAL							854.91	-854.91
	20861	Bill Pmt -Check	12/18/2019	UWHC	PALS cards	101 · Operating Checking	-33.00	
	9062	Bill	12/16/2019		PALS cards	791 · Training Center Expense	33.00	-33.00
TOTAL							33.00	-33.00
	20863	Bill Pmt -Check	12/19/2019	MadWraps LLC	DG Sign	101 · Operating Checking	-357.37	
	10039	Bill	12/06/2019		DG Sign	790 · Publicity and Advertising	357.37	-357.37
TOTAL							357.37	-357.37
	20864	Check	12/30/2019	Antoniewicz, Lisa M		101 · Operating Checking	-182.02	
						725 · Staff Continuing Education	182.02	-182.02
TOTAL							182.02	-182.02
	20865	Bill Pmt -Check	12/30/2019	Ace Hardware	Misc supplies	101 · Operating Checking	-44.43	
		Bill	12/15/2019		Misc supplies	898 · Building and Grounds	44.43	-44.43
TOTAL							44.43	-44.43
	20866	Bill Pmt -Check	12/30/2019	Badger Farms LLC	12/7 HATS OFF event	101 · Operating Checking	-350.00	
	5013	Bill	12/07/2019		12/7 HATS OFF event	810 · EMT Recognition	350.00	-350.00
TOTAL							350.00	-350.00
	20867	Bill Pmt -Check	12/30/2019	Bound Tree Medical, LLC		101 · Operating Checking	-3,461.91	
	83428130	Bill	12/01/2019		Misc Medical Supplies	850 · Medical Supplies	2,216.83	-2,216.83
	83434959	Bill	12/05/2019		Epi	850 · Medical Supplies	105.40	-105.40
	83448070	Bill	12/18/2019		Misc Medical Supplies	850 · Medical Supplies	930.69	-930.69
	83449341	Bill	12/19/2019		splints	850 · Medical Supplies	430.99	-208.99
TOTAL							3,683.91	-3,461.91
	20868	Bill Pmt -Check	12/30/2019	Diversified Benefit Services, Inc.	Section 125 plan administration	101 · Operating Checking	-125.00	
	296509	Bill	12/23/2019		Section 125 plan administration	870 · Insurance	125.00	-125.00

Deer Grove EMS District
Bill Payment Detail
December 2019

	Num	Type	Date	Name	Memo	Account	Original Amount	Paid Amount
TOTAL							125.00	-125.00
	20869	Bill Pmt -Check	12/30/2019	Eagle Engraving, Inc.	Medals	101 · Operating Checking	-1,557.95	
	2019-6855	Bill	12/23/2019		Medals	860 · Clothing	1,557.95	-1,557.95
TOTAL							1,557.95	-1,557.95
	20870	Bill Pmt -Check	12/30/2019	Life-Assist, Inc.	VividTrac supplies/stretcher	101 · Operating Checking	-1,823.94	
	962445	Bill	12/17/2019		VividTrac supplies/stretcher	850 · Medical Supplies	1,823.94	-1,823.94
TOTAL							1,823.94	-1,823.94
	20871	Bill Pmt -Check	12/30/2019	Piggly Wiggly	UPS shipping/Chili supplies	101 · Operating Checking	-29.69	
		Bill	12/01/2019		UPS Shipping	770 · Communications	14.06	-14.06
					Chili supplies	810 · EMT Recognition	15.63	-15.63
TOTAL							29.69	-29.69
	20872	Bill Pmt -Check	12/30/2019	Pomp's Tire Service, Inc.	C79 tires	101 · Operating Checking	-675.96	
	80205464	Bill	12/18/2019		C79 tires	829 · Vehicle Maintenance	675.96	-675.96
TOTAL							675.96	-675.96
	20873	Bill Pmt -Check	12/30/2019	Society Insurance	Work Comp	101 · Operating Checking	-1,676.00	
		Bill	12/12/2019		Work Comp	722 · Workmans Comp	1,676.00	-1,676.00
TOTAL							1,676.00	-1,676.00
	20874	Bill Pmt -Check	12/30/2019	Truckstar Collision Center	M80 repairs	101 · Operating Checking	-13,014.79	
	15233	Bill	12/19/2019		M80 repairs	829 · Vehicle Maintenance	13,014.79	-13,014.79
TOTAL							13,014.79	-13,014.79
	20875	Bill Pmt -Check	12/30/2019	US Bank		101 · Operating Checking	-5,395.00	
		Bill	12/30/2019			One Card - Office Use Only	3,188.84	-3,188.84
		Bill	12/30/2019			One Card - Lisa Antoniewicz	385.05	-385.05
		Bill	12/30/2019			One Card - Mandy Cysiewski	1,480.66	-1,480.66
		Bill	12/30/2019			One Card - Eric Lang	340.45	-340.45
TOTAL							5,395.00	-5,395.00
	20876	Bill Pmt -Check	12/30/2019	UWHC		101 · Operating Checking	-56.00	
	9062A	Bill	12/16/2019		6 PALS cards	791 · Training Center Expense	48.00	-48.00
	9078	Bill	12/27/2019		PALS card	791 · Training Center Expense	8.00	-8.00
TOTAL							56.00	-56.00

Deer Grove EMS District
Bill Payment Detail
December 2019

	Num	Type	Date	Name	Memo	Account	Original Amount	Paid Amount
		Bill Pmt -CCard	12/04/2019	GFC Leasing WI	Copier Lease	One Card - Office Use Only	-48.30	
	I00549902	Bill	11/20/2019		Copier Lease	740 · Office Equipment (expense)	48.30	-48.30
TOTAL							48.30	-48.30
		Bill Pmt -CCard	12/09/2019	Bound Tree Medical, LLC		One Card - Office Use Only	-714.25	
	83431947	Bill	12/01/2019		Intubation bag	850 · Medical Supplies	327.15	-327.15
	83430724	Bill	12/02/2019		Intubation bags	850 · Medical Supplies	152.97	-152.97
	83430723	Bill	12/02/2019		Suction supplies	850 · Medical Supplies	38.70	-38.70
	83431949	Bill	12/03/2019		Famotidine	850 · Medical Supplies	41.49	-41.49
	83431948	Bill	12/03/2019		ET Tubes/NG Tube	850 · Medical Supplies	63.95	-63.95
	83433520	Bill	12/04/2019		O2 bag	850 · Medical Supplies	89.99	-89.99
TOTAL							714.25	-714.25
		Bill Pmt -CCard	12/18/2019	Airgas USA, LLC	O2	One Card - Office Use Only	-59.86	
	9966415078	Bill	12/01/2019		O2	850 · Medical Supplies	59.86	-59.86
TOTAL							59.86	-59.86
		Bill Pmt -CCard	12/18/2019	Charter Communications		One Card - Office Use Only	-266.06	
	0000443120119	Bill	12/01/2019		Dec Shared Internet Services	770 · Communications	69.99	-69.99
					Dec phone/fax	770 · Communications	82.24	-82.24
	0023811120519	Bill	12/05/2019		St 2 phone/internet	770 · Communications	113.83	-113.83
TOTAL							266.06	-266.06
		Bill Pmt -CCard	12/18/2019	Dinges Fire Company		One Card - Office Use Only	-892.00	
	05493	Bill	12/03/2019		Back Name Patches-Regali/Frye	860 · Clothing	148.00	-148.00
	05553	Bill	12/06/2019		Boots	860 · Clothing	744.00	-744.00
TOTAL							892.00	-892.00
		Bill Pmt -CCard	12/18/2019	Gordon Flesch	Nov copies	One Card - Office Use Only	-23.61	
	IN12794438	Bill	12/07/2019		Nov copies	740 · Office Equipment (expense)	23.61	-23.61
TOTAL							23.61	-23.61
		Bill Pmt -CCard	12/18/2019	Horstman Computers	Laptop	One Card - Office Use Only	-589.00	
	2046005	Bill	12/03/2019		Laptop	775 · IT expenses	589.00	-589.00
TOTAL							589.00	-589.00
		Bill Pmt -CCard	12/30/2019	Bound Tree Medical, LLC	Airways/Emesis Bags	One Card - Office Use Only	-77.00	
		Bill	12/30/2019		Airways/Emesis Bags	850 · Medical Supplies	77.00	-77.00
TOTAL							77.00	-77.00

Deer Grove EMS District
Credit Card Purchases
December 2019

Date	Source Name	Memo	Split	Amount
301 · One Card				
One Card - Eric Lang				
12/06/2019	Vistaprint	EMS Visitor Program cards	878 · Community Medic Program	39.09
12/07/2019	School Grounds	Dessert for HATS OFF	810 · EMT Recognition	36.00
12/10/2019	Embroidery Professionals	Logo printing	860 · Clothing	38.75
12/13/2019	Lighthouse Uniforms	Class A Hat piece	860 · Clothing	174.65
12/18/2019	Amazon.com	USB Adaptor	850 · Medical Supplies	5.98
12/20/2019	Amazon.com	USB Adaptor	850 · Medical Supplies	5.98
12/23/2019	Embroidery Professionals		860 · Clothing	40.00
Total One Card - Eric Lang				340.45
One Card - Lisa Antoniewicz				
12/01/2019	Costco	St 1 TV	879 · Health Maintenance & Safety	385.05
Total One Card - Lisa Antoniewicz				385.05
One Card - Mandy Cysiewski				
12/06/2019	TechSoup	Adobe Pro	775 · IT expenses	55.00
12/11/2019	Intuit	QB Payroll	899 · Miscellaneous Expenses	715.00
12/12/2019	UW Health	Jan Difficult Airway class - Seth/Ross	1502 · Prepaid Expenses	400.00
12/13/2019	USPS	Commission packets	740 · Office Equipment (expense)	7.25
12/15/2019	Amazon.com	Movie-Reimbursed by staff	770 · Communications	3.99
12/15/2019	Home Depot	Space Heater	898 · Building and Grounds	53.55
12/17/2019	Amazon.com	Life Vest	879 · Health Maintenance & Safety	119.98
12/18/2019	Amazon.com		-SPLIT-	125.89
Total One Card - Mandy Cysiewski				1,480.66
Total 301 · One Card				2,206.16
TOTAL				**2,206.16**

Deer Grove EMS District
Payroll Transaction Detail
December 2019

Date	Num	Type	Source Name	Payroll Item	Qty	Amount
12/06/2019	DD	Paycheck	Anders, Devon C	Regular Hourly Rate	80	1,635.20
			Anders, Devon C	Overtime Hourly Rate	16	490.56
						2,125.76
12/20/2019	DD	Paycheck	Anders, Devon C	Regular Hourly Rate	48	981.12
			Anders, Devon C	Vacation Hourly Rate	16	327.04
			Anders, Devon C	Vacation OT Hourly Rate	8	245.28
						1,553.44
12/06/2019	DD	Paycheck	Antoniewicz, Lisa M	Regular Hourly Rate	24	634.08
			Antoniewicz, Lisa M	Regular Hourly Rate	22	581.24
			Antoniewicz, Lisa M	Vacation Hourly Rate	22.5	594.45
			Antoniewicz, Lisa M	Vacation OT Hourly Rate	11.5	455.75
						2,265.52
12/20/2019	DD	Paycheck	Antoniewicz, Lisa M	Regular Hourly Rate	44	1,162.48
			Antoniewicz, Lisa M	Regular Hourly Rate	24	634.08
			Antoniewicz, Lisa M	Overtime Hourly Rate	28	1,109.64
			Antoniewicz, Lisa M	Overtime Hourly Rate	13	515.19
			Antoniewicz, Lisa M	Vacation Hourly Rate	12	317.04
						3,738.43
12/06/2019	DD	Paycheck	Belden, Elliott H	Regular Hourly Rate	80	1,692.00
			Belden, Elliott H	Overtime Hourly Rate	20	634.60
						2,326.60
12/20/2019	DD	Paycheck	Belden, Elliott H	Regular Hourly Rate	64	1,353.60
			Belden, Elliott H	Overtime Hourly Rate	10	317.30
			Belden, Elliott H	Regular Hourly Rate	2	42.30
						1,713.20
12/06/2019	DD	Paycheck	Berggren, Kathryn B	Weekday Stipend	8	144.00
						144.00
12/20/2019	DD	Paycheck	Campbell, Erin A	Regular Hourly Rate	24	360.00
			Campbell, Erin A	Regular Hourly Rate	2.75	41.25
						401.25

Deer Grove EMS District
Payroll Transaction Detail
December 2019

Date	Num	Type	Source Name	Payroll Item	Qty	Amount
12/06/2019	DD	Paycheck	Cummings, Ross E	Regular Hourly Rate	63	1,287.72
			Cummings, Ross E	Overtime Hourly Rate	40	1,226.40
			Cummings, Ross E	Regular Hourly Rate	5	102.20
			Cummings, Ross E	Vacation Hourly Rate	12	245.28
						2,861.60
12/20/2019	DD	Paycheck	Cummings, Ross E	Regular Hourly Rate	66.5	1,359.26
			Cummings, Ross E	Overtime Hourly Rate	17.5	536.55
			Cummings, Ross E	Regular Hourly Rate	5.5	112.42
			Cummings, Ross E	Regular Hourly Rate	6	122.64
						2,130.87
12/06/2019	DD	Paycheck	Curry, Clairissa K	Regular Hourly Rate	12	180.00
						180.00
12/20/2019	DD	Paycheck	Curry, Clairissa K	Regular Hourly Rate	12	180.00
			Curry, Clairissa K	Regular Hourly Rate	2.5	37.50
						217.50
12/06/2019	DD	Paycheck	Cushing, Daniel P	Weekday Stipend	4	72.00
			Cushing, Daniel P	Weekend Stipend	2	36.00
						108.00
12/06/2019	DD	Paycheck	Cysiewski, Mandy J	Regular Hourly Rate	28.8	518.40
			Cysiewski, Mandy J	Holiday Hourly Rate	3.2	57.60
						576.00
12/20/2019	DD	Paycheck	Cysiewski, Mandy J	Regular Hourly Rate	32	576.00
						576.00
12/20/2019	DD	Paycheck	Dostalek, Jeffrey J	Regular Hourly Rate	2	30.50
						30.50
12/06/2019	DD	Paycheck	Einstein, Justin D	Weekday Stipend	4	72.00
						72.00
12/06/2019	DD	Paycheck	Ennis, Jamie L	Weekday Stipend	2	36.00
			Ennis, Jamie L	Weekend Stipend	3	54.00
						90.00

Deer Grove EMS District
Payroll Transaction Detail
December 2019

Date	Num	Type	Source Name	Payroll Item	Qty	Amount
12/06/2019	DD	Paycheck	Fedorowicz, Samantha E	Weekday Stipend	1	18.00
			Fedorowicz, Samantha E	Weekend Stipend	3	54.00
						72.00
12/20/2019	DD	Paycheck	Frye, Brandon S	Regular Hourly Rate	24	360.00
						360.00
12/06/2019	DD	Paycheck	Hartman, Michael D	Weekday Stipend	1	18.00
			Hartman, Michael D	Weekend Stipend	1	18.00
						36.00
12/06/2019	DD	Paycheck	Jensen, Andrew M	Regular Hourly Rate	23	345.00
						345.00
12/06/2019	DD	Paycheck	Lang, Eric A	Salary	72	2,838.46
			Lang, Eric A	Holiday Salary	8	315.39
						3,153.85
12/20/2019	DD	Paycheck	Lang, Eric A	Salary	80	3,153.85
						3,153.85
12/06/2019	DD	Paycheck	Lasko, Wendy J	Regular Hourly Rate	5	100.50
			Lasko, Wendy J	Vacation Hourly Rate	48	964.80
			Lasko, Wendy J	Holiday Hourly Rate	16	561.60
			Lasko, Wendy J	Holiday OT Rate	8	361.20
						1,988.10
12/20/2019	DD	Paycheck	Lasko, Wendy J	Regular Hourly Rate	80	1,608.00
			Lasko, Wendy J	Overtime Hourly Rate	20.5	618.08
						2,226.08
12/06/2019	DD	Paycheck	Lillegard, Micah D	Regular Hourly Rate	48	720.00
						720.00
12/20/2019	DD	Paycheck	Lillegard, Micah D	Regular Hourly Rate	48	720.00
						720.00
12/06/2019	DD	Paycheck	Martin, Alexa S	Regular Hourly Rate	2.5	37.50
						37.50

Deer Grove EMS District
Payroll Transaction Detail
December 2019

Date	Num	Type	Source Name	Payroll Item	Qty	Amount
12/20/2019	DD	Paycheck	Martin, Alexa S	Regular Hourly Rate	4	60.00
						60.00
12/06/2019	DD	Paycheck	Marvin, Courtney A	Regular Hourly Rate	2	30.00
						30.00
12/20/2019	DD	Paycheck	Marvin, Courtney A	Regular Hourly Rate	2.5	37.50
			Marvin, Courtney A	Regular Hourly Rate	12	180.00
						217.50
12/06/2019	DD	Paycheck	McMullen, Jeremy B	Weekday Stipend	26	468.00
			McMullen, Jeremy B	Weekend Stipend	26	468.00
						936.00
12/06/2019	DD	Paycheck	Mickelson, Matthew A	Regular Hourly Rate	73.5	1,355.34
			Mickelson, Matthew A	Overtime Hourly Rate	10.5	290.43
			Mickelson, Matthew A	Regular Hourly Rate	4	73.76
						1,719.53
12/20/2019	DD	Paycheck	Mickelson, Matthew A	Regular Hourly Rate	80	1,475.20
			Mickelson, Matthew A	Overtime Hourly Rate	16	442.56
						1,917.76
12/06/2019	DD	Paycheck	Miles, Thomas E	Weekday Stipend	4	72.00
						72.00
12/20/2019	DD	Paycheck	Regali, Trevor C	Regular Hourly Rate	12	180.00
			Regali, Trevor C	Regular Hourly Rate	2	30.00
						210.00
12/06/2019	DD	Paycheck	Sanders, Seth C	Regular Hourly Rate	80	1,635.20
			Sanders, Seth C	Overtime Hourly Rate	20	613.20
						2,248.40
12/20/2019	DD	Paycheck	Sanders, Seth C	Regular Hourly Rate	64	1,308.16
			Sanders, Seth C	Overtime Hourly Rate	10.5	321.93
			Sanders, Seth C	Regular Hourly Rate	3	61.32
						1,691.41

Deer Grove EMS District
Payroll Transaction Detail
December 2019

Date	Num	Type	Source Name	Payroll Item	Qty	Amount
12/06/2019	DD	Paycheck	Schlicht, Trevor A	Regular Hourly Rate	48	933.12
			Schlicht, Trevor A	Holiday Hourly Rate	16	551.04
			Schlicht, Trevor A	Holiday OT Rate	8	353.28
						1,837.44
12/20/2019	DD	Paycheck	Schlicht, Trevor A	Regular Hourly Rate	68	1,321.92
			Schlicht, Trevor A	Overtime Hourly Rate	19.5	568.62
			Schlicht, Trevor A	Vacation Hourly Rate	12	233.28
						2,123.82
12/20/2019	DD	Paycheck	Sefcik, Daniel D	Regular Hourly Rate	13	195.00
						195.00
12/06/2019	DD	Paycheck	Smithback, Melissa A	Weekday Stipend	1	18.00
						18.00
12/06/2019	DD	Paycheck	Stier, Peter	Medical Director Fee		500.00
						500.00
12/06/2019	DD	Paycheck	Wargo, Thomas V	Weekday Stipend	1	18.00
						18.00
12/06/2019	DD	Paycheck	Yelk Meinholz, Amy M	Weekday Stipend	4	72.00
						72.00
TOTAL						**47,789.91**

Deer Grove EMS District
Member expenses and reimbursements through payroll
As of December 31, 2019

Type	Date	Num	Name	Memo	Amount
1512 · Member Personal Expenses Due					
Total 1512 · Member Personal Expenses Due					
Member Reimbursements Payable					
Paycheck	12/06/2019	DD	Sanders, Seth C		22.04
Total Member Reimbursements Payable					22.04
TOTAL					**22.04**

Deer Grove EMS District
Deposit Detail
December 2019

Type	Date	Name	Memo	Account	Amount
General Journal	**12/31/2019**	**LifeQuest**	**Payment Received - Overpayment Returns - Dec**	**105 · Hometown Bank**	**33,841.82**
		LifeQuest	Payment Received - Overpayment Returns - Dec	1210 · Lifequest Receivables	-33,841.82
TOTAL					-33,841.82
Deposit	**12/30/2019**		**Deposit**	**103 · Savings bank of Deerfield**	**14,825.94**
		Lang, Eric A	Deposit	770 · Communications	-4.00
		League of Wisconsin Municipalities	Deposit	999 · Insurance Reimbursement	-12,514.79
Payment	12/02/2019	Deerfield Fire Dept.		1499 · Undeposited Funds	-941.47
Payment	12/05/2019	Cottage Grove Police Dept.		1499 · Undeposited Funds	-154.04
Payment	12/20/2019	Town of Cottage Grove		1499 · Undeposited Funds	-1,211.64
TOTAL					-14,825.94
Deposit	**12/31/2019**		**Interest**	**103 · Savings bank of Deerfield**	**52.38**
			Interest	640 · Interest Earned	-52.38
TOTAL					-52.38
Deposit	**12/31/2019**		**Interest**	**101 · Operating Checking**	**0.84**
			Interest	640 · Interest Earned	-0.84
TOTAL					-0.84

Aging Summary Report

2017	Billable Units	Current	31-60 days	61-90 days	91-120	121-150	151-180	Over 180	Total	Write Offs	Deposit from Collections
January	149	61,458.81	37,112.81	11,562.06	7,080.20	11,094.60	11,702.10	5,807.00	145,817.58		31,027.93
February	161	74,148.27	40,328.34	19,361.01	8,985.96	4,873.00	9,434.90	6,722.40	163,853.88		25,579.00
March	157	65,606.95	37,581.40	22,508.70	16,097.28	5,606.70	1,560.60	12,224.00	161,185.63		30,405.20
April	155	47,304.66	40,581.55	26,373.53	17,138.60	8,251.20	5,138.80	7,207.30	151,995.64		29,563.91
May	173	74,737.13	26,279.20	24,380.75	11,267.10	11,586.40	7,824.30	6,744.30	162,819.18		37,291.01
June	178	66,863.45	44,391.66	11,065.84	18,646.15	11,267.10	10,045.60	12,875.60	175,155.40		28,355.41
July	173	54,296.38	52,170.43	29,085.97	7,221.51	10,078.50	2,491.00	11,995.90	167,339.69		31,444.62
August	192	59,414.23	52,117.11	32,853.64	20,779.07	5,780.44	5,134.60	9,630.10	185,709.19	731.98	33,253.57
September	199	66,463.41	51,249.84	33,167.93	22,208.64	10,418.59	1,399.00	12,426.00	197,333.41		31,323.99
October	178	43,014.56	36,993.32	28,497.07	26,269.53	14,661.20	4,936.40	8,677.40	163,049.48		39,216.62
November	221	70,397.26	41,138.57	22,604.47	18,936.24	30,994.13		10,641.00	194,711.67		30,923.41
December	191	78,999.03	44,799.91	22,326.80	17,446.07	15,663.61	8,730.46	13,149.50	201,115.38		35,785.26
	2127									731.98	384,169.93

2018	Billable Units	Current	31-60 days	61-90 days	91-120	121-150	151-180	Over 180	Total	Write Offs	Deposit from Collections
January	193	77,490.96	40,382.52	30,769.00	15,148.00	4,715.00	8,422.40	15,844.96	192,772.84		40,563.24
February	228	110,117.64	40,368.00	23,290.26	20,148.17	9,211.40	2,302.80	22,784.56	228,222.83		35,926.17
March	245	95,006.48	60,922.26	26,786.80	15,132.83	11,889.20	5,197.40	23,049.56	237,984.53		40,942.37
April	222	72,228.95	53,100.88	39,572.38	14,691.00	11,422.20	3,308.20	23,501.76	217,825.37		36,668.79
May	236	99,106.66	31,953.62	20,818.07	28,126.98	20,101.20		21,024.56	221,131.09		54,903.91
June	229	78,840.02	53,395.40	16,373.55	12,164.89	19,230.00		27,150.96	207,154.82		38,077.81
July	220	84,606.57	61,585.84	29,871.62	12,279.75	7,548.69	7,779.00	20,684.10	224,355.57		37,155.27
August	228	80,439.00	45,447.53	40,351.17	24,722.24	4,254.32	8,860.40	27,653.10	231,727.76		33,914.19
September	217	54,355.03	62,208.89	30,768.11	35,987.17	11,528.36		26,696.70	221,544.26		31,890.44
October	200	42,844.40	49,259.79	34,151.89	29,538.11	28,040.64		23,102.42	206,937.25		39,706.89
November	176	25,971.91	40,098.64	33,661.39	21,988.29	33,325.00		23,353.30	178,398.53		34,564.47
December	202	45,646.53	54,893.11	35,180.18	25,247.59	28,977.37		29,158.70	219,103.48		25,613.83
	2596									0.00	449,927.38

2019	Billable Units	Current	31-60 days	61-90 days	91-120	121-150	151-180	Over 180	Total	Write Offs	Deposit from Collections
January	199	31,346.95	56,391.67	28,271.78	27,854.88	18,701.80		36,609.10	199,176.18		48,757.06
February	208	53,194.16	52,674.93	34,378.74	17,762.88	28,889.40		32,683.30	219,583.41		32,875.12
March	193	53,471.33	61,381.30	23,473.34	24,674.14	15,776.74		17,319.70	196,096.55		58,118.70
April	181	52,431.24	52,890.01	26,646.08	14,602.10	20,722.49		20,270.70	187,562.62		55,108.87
May	153	52,765.43	40,573.68	17,361.72	17,928.18	12,430.57		11,381.90	152,441.48		53,992.37
June	165	49,043.76	45,335.65	34,582.58	11,066.42	14,170.90		13,686.57	167,885.88		43,938.15
July	177	69,191.46	35,989.67	26,431.68	27,742.68	12,885.00		10,086.20	182,326.69		27,963.23
August	176	79,771.93	47,802.44	17,256.04	17,110.49	18,078.98		11,910.10	191,929.98		47,957.50
September	179	74,047.49	36,321.27	23,141.77	14,002.68	28,620.28		10,595.10	186,728.59		37,491.65
October	177	51,185.16	63,638.53	23,040.94	17,040.37	11,088.00		18,296.78	184,289.78		45,611.85
November	169	70,102.66	20,678.15	29,309.43	14,593.71	12,993.40		17,940.88	165,618.23		44,753.43
December	153	61,419.76	39,267.29	13,857.38	17,053.15	8,995.83		19,419.98	160,013.39		31,391.23
	2130									0.00	527,959.16

Total Runs Entered

Deer-Grove EMS District

December 2018 to December 2019

These numbers are based on the Date Of Entry at LifeQuest Services of each individual run.

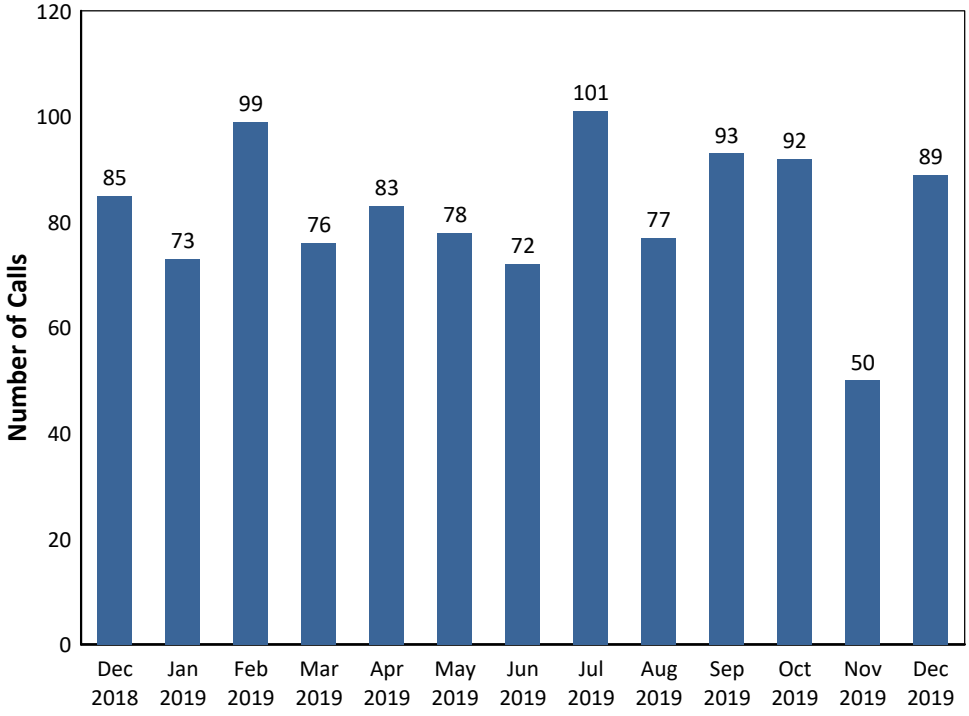

All Phases Gross Revenue

Deer-Grove EMS District

January 2017 to December 2019

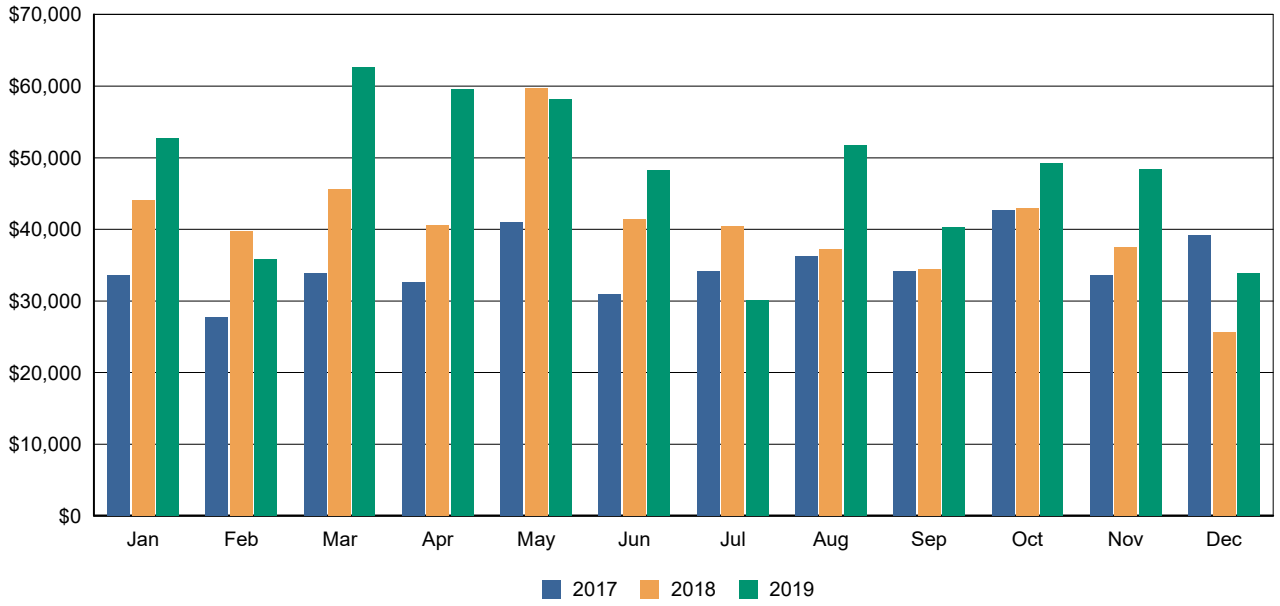

	2017	2018	2019
January	$33,631	$44,000	$52,789
February	$27,819	$39,682	$35,874
March	$33,938	$45,580	$62,603
April	$32,628	$40,624	$59,518
May	$40,984	$59,762	$58,122
June	$30,942	$41,489	$48,182
July	$34,202	$40,426	$30,114
August	$36,229	$37,271	$51,774
September	$34,167	$34,504	$40,318
October	$42,677	$42,987	$49,181
November	$33,611	$37,564	$48,473
December	$39,175	$25,614	$33,842
Total Gross Revenue	**$420,004**	**$489,503**	**$570,790**

Deer-Grove EMS District

Monthly Service Report

December 2019

Calls by Municipality (includes missed calls):	Calls by Unit:
43 – Village Cottage Grove	36 – Medic/Rescue 78
15 – Town Cottage Grove	19 – Medic/Rescue 80
12 – Village Deerfield	36 – Medic/Rescue 81
9 – Town Deerfield	9 – Missed
6 – Town Pleasant Springs	7 – Car 79
10 – Mutual Aid/Intercepts	**1037 Calls YTD**
95 Total Calls Dispatched	(1152 - *Same time last year)*
(99 - *Same time last year)*	

Membership:

Volunteers (12): Kathryn Berggren (EMT-B), Dan Cushing (EMT-B), Mandy Cysiewski (EMT-B), Justin Einstein (EMT-P), Jamie Ennis (EMT-P), Samantha Fedorowicz (EMT-A), Michael Hartman (EMT-I), Tom Miles (EMT-A/RN), Jerry McMullen (EMT-P), Amy Meinholz (EMT-P), Melissa Smithback (EMT-B), Thomas Wargo (EMT-B/RN).

Volunteer New Recruits (5): Cristalyne Bell (EMT-B), Bryce Bischel (EMT-A)

Volunteers provided 767 hours of coverage to the District in December, compared to 552 hours last month and 816 hours in the same month last year.

LTE(10): Erin Campbell (EMT-P), Clairissa Curry (EMT-P), Jeff Dostalek (EMT-P), Brandyn Frye (EMT-P), Andrew Jensen (EMT-P), Micah Lillegard (EMT-P), Alexa Martin (EMT-P/RN), Courtney Marvin (EMT-P), Trevor Regali (EMT-P), Danny Sefcik (EMT-P).

Part-Time(1): Mandy Cysiewski

Full-Time(9): Lisa Antoniewicz (Critical Care Paramedic/RN), Devon Anders (EMT-P), Elliott Belden (EMT-P), Ross Cummings (Critical Care Paramedic/TEMS), Eric Lang (EMT-P), Wendy Lasko (EMT-P/RN), Matthew Mickelson (EMT-P/RN), Seth Sanders (EMT-P), Trevor Schlicht (EMT-P).

Leave of Absence (3): Lisa Schultz (V), Erik Severson (V), Bryan Adler (LTE)

Chief's Report:
As of December 26th, I have been cleared to return to full duty. Since, I have responded to calls and enjoy being "back to normal".

As indicated in the training overview, VividTrac laryngoscope training was completed throughout the month of December. These final sessions provided an in depth review of the devices and good techniques for success when using. As I have the most experience with this device, I taught all of the sessions.

I worked with Lt McMullen to create a new airway bag to coincide with the roll-out of the VividTrac device. This involved a transition from a one-bag system with roll-out compartments to a multi-kit concept. This new concept separates out the adult and pediatric airway supplies, which will help the staff stay organized while providing critical interventions to patients.

I attended and provided testimony at the Legislative hearing for Assembly Bill 569. This bill covers PTSD and its allocation to public safety officers. Currently this bill and the identical bill in the Senate does provide coverage to stand-alone EMS agencies, like ours.

Worked with other Dane County EMS, Fire and Law Enforcement agencies to modify an existing Active Threat response document. The document will help guide the response to active shooters county wide. The national models of C3 Pathways Active Shooter Incident Management (AAIM) and Advanced Law Enforcement Rapid Response Training (ALERRT) were used as the framework for the document. Roll-out and orientation trainings were held for all Dane County agencies and the guideline will go live in January 2020.

Deputy Chief Antoniewicz and I web-attended a presentation covering BioSpatial, which is a software platform designed to configure the data we upload into the Wisconsin Ambulance Record Data System (WARDS) to a more usable form. We can currently search our own data locally, it is not currently configured to share data, but we are hoping the WI EMS Office will allow these features. This would allow us to compare ourselves to other EMS agencies throughout WI.

Training Report:
All but 3 active members completed annual skills competency evaluations. A plan is being devised to assure the remaining 3 individuals are able to complete the training before February 1st. December training covered Airway Management with a debut of Vividtrac, led by Chief Lang. January training will cover the 2020 protocols and a review of OB emergencies and neonatal transport.

Staff attended SCRTAC Trauma Conference in Verona. Chief Lang attended a drill with a focus on reunification procedures in Madison. DC Antoniewicz is now a PALS Instructor and assisted Chief Lang with an in-house class for DG medics.

Upcoming training sessions:
National EMS Instructor Course – Jan 10/11/12 - Madison
Difficult Airway Course – Jan 28/29 – UW EEC
High Performance CPR (HPCPR) Initiative – Jan 13/22
Substance Abuse and Dementia – Feb 21
EMS Management and Leadership Workshop – Feb 28/29 – Rice Lake
High Performance CPR T-T-T – March 4 - Madison
Wisconsin Paramedic Seminar – April 1/2/3 – Oshkosh

Training Center:
3 CPR classes were provided for Cottage Grove Fire Department. 1 PALS course and 1 ACLS course were provided off-site. 1 CPR class is scheduled for January.

Chief Lang, Paramedic Ross Cummings, Lt. Belden and DC Antoniewicz met with the officers of the Cottage Grove Police Department to review overdose protocols and Narcan administration.

Public Relations/Special Events:
Staff attended a recruitment event at Madison College – special thanks to Seth Sanders, Lt. Belden and Mandy Cysiewski. Lt. Belden and Seth Sanders also provided first aid education to the Utica Snowmobile Club. Staff participated in a mock medical emergency at the Deerfield High School on December 4th. In addition, crews enjoyed holiday events in the Cottage Grove and Deerfield communities – including the Christmas in the Grove Parade and the Deerfield Cookie Walk.

Upcoming events:
Triad Senior Session on Safety – May 19

Vehicles

DEMER'S (78):

Start mileage: 43,084 End Mileage: 44,753

Start hours: 1,966 End Hours: 2,063

78 running well.

Horton (81):

Start Mileage: 147,557 End Mileage: 148,826

Start Hours: 8,039 End Hours: 8,122

81 is running and in service.

Interceptor (Car 79):

Start Mileage: 41,955 End Mileage: 42,522

79 is running well. Tires have been replaced.

DEMER'S (80):

Start Mileage: 61,922 End Mileage:

Start Hours: 2,919 End Hours:

M80 is at Truckstar for repairs.

December Quick Stats

Date	Amb 1	Amb 2 / FR	Reason Used	Ending Miles	Driver
1	24	0	Meeting - Out of District	42104	Eric Lang
2	24	12	Community Event	42168	Jeremy McMullen
3	24	12	Meeting - Out of District	42270	Eric Lang
4	24	24	First Responder Coverage	42292	Matthew Mickelson
5	24	24	Community Medic	42304	Matthew Mickelson
6	24	24	Meeting - In District	42445	Eric Lang
7	24	0	Meeting - Out of District	42494	Eric Lang
8	24	0	First Responder Coverage	42552	Ross Cummings
9	24	0			
10	24	12			
11	24	8			
12	24	12			
13	24	0			
14	24	24			
15	24	23			
16	24	0			
17	24	0			
18	24	24			
19	24	12			
20	24	24			
21	24	24			
22	24	23			
23	24	12			
24	24	0			
25	24	24			
26	24	12			
27	24	24			
28	24	0			
29	24	23			
30	24	13			
31	24	0			
Total	744	390			
1134 hours of coverage total					
Total of 152% coverage					

Elite lifequest

2019 QTR 4

Runs by City

Scene Incident City Name (eScene.17)	Number of Runs	Percent of Total Runs
Cottage Grove	386	39.23%
Cottage Grove (Town of)	157	15.96%
Deerfield	149	15.14%
Deerfield (Town of)	93	9.45%
Pleasant Springs (Town of)	91	9.25%
Cambridge	29	2.95%
Marshall	18	1.83%
Christiana (Town of)	10	1.02%
Sun Prairie (Town of)	10	1.02%
Oakland (Town of)	8	0.81%
Medina (Town of)	7	0.71%
Sun Prairie	6	0.61%
Stoughton	4	0.41%
Monona	3	0.30%
Village of Cottage Grove	3	0.30%
Village of Deerfield	2	0.20%
Blooming Grove (Town of)	1	0.10%
Dunkirk (Town of)	1	0.10%
Edgerton	1	0.10%
Lake Mills (Town of)	1	0.10%
McFarland	1	0.10%
Rutland (Town of)	1	0.10%
Village of Marshall	1	0.10%
York (Town of)	1	0.10%
	Total: 984	**Total: 100.00%**

Report Filters

Incident Date: is between '1/1/2019' and '12/31/2019'

Elite lifequest

Runs by Destination Name

Disposition Destination Name Delivered Transferred To (eDisposition.01)	Disposition Destination Code Delivered Transferred To (eDisposition.02)	Number of Runs	Percent of Total Runs
		334	33.94%
COLUMBUS COMMUNITY HOSPITAL	1042	1	0.10%
FORT MEMORIAL HOSPITAL	133	4	0.41%
MERITER HOSPITAL	248	111	11.28%
Not Applicable		9	0.91%
Not Recorded		1	0.10%
St Marys Emergency Center-Sun Prairie	73	14	1.42%
ST MARYS HOSPITAL	71	278	28.25%
STOUGHTON HOSPITAL	1046	21	2.13%
UNIVERSITY OF WI HOSPITALS & CLINICS AUTHORITY	125	150	15.24%
UW Health-American Center	126	45	4.57%
WILLIAM S MIDDLETON MEMORIAL VETERANS HOSPITAL	125501	16	1.63%
		Total: 984	**Total: 100.00%**

Report Filters

Incident Date: is between '01/01/2019' and '12/31/2019'

Runs by Location Type

Scene Incident Location Type (eScene.09)	Number of Runs	Percent of Total Runs
Residence - Single Family Home	407	41.36%
Street or Highway	147	14.94%
Residence - Apartment or Townhouse	123	12.50%
Nursing Home (SNIF, LTCF, Etc.)	47	4.78%
Health Facility - Not Otherwise Listed	40	4.07%
Public Building - Commercial Establishment	34	3.46%
	28	2.85%
Residence - Not Otherwise Listed	21	2.13%
Health Facility - Medical Office	17	1.73%
Garage of Single Family Home	11	1.12%
Public Building - Not Otherwise Listed	10	1.02%
Factory	9	0.91%
Residential Institution - Not Otherwise Listed	9	0.91%
Public Building - Restaurant/Café	8	0.81%
School - Middle School	8	0.81%
School - Elementary	7	0.71%
Daycare/Childcare Facility	6	0.61%
Farm	6	0.61%
School - High School	6	0.61%
Other Paved Road	5	0.51%
Recreation Area - Public Park	5	0.51%
Prison/Jail/Detention Center	4	0.41%
Recreation Area - Not Otherwise Listed	4	0.41%
Public Building - Government	3	0.30%
Sport Facility - Field	3	0.30%
Not Applicable	2	0.20%
Not Recorded	2	0.20%
Parking lot as the place of occurrence of the external cause	2	0.20%
Religious Facility (not school)	2	0.20%
Sport Facility - Court	2	0.20%
Garden or yard in single-family (private) house as the place of occurrence of the external cause	1	0.10%
Public Building - Cultural	1	0.10%
Recreation Area - Campsite	1	0.10%
Residence - Mobile Home	1	0.10%
Sport Facility - Not Otherwise Listed	1	0.10%
Wilderness Area	1	0.10%
	Total: 984	**Total: 100.00%**

Report Filters

Incident Date: is between '1/1/2019' and '12/31/2019'

Elite lifequest

Average Run Times Summary Report

Avg Unit Notified to Enroute in Minutes	Avg Unit Enroute to Arrived at Scene in Minutes	Avg Unit Arrived on Scene to Left Scene in Minutes	Avg Unit Left Scene to Arrived at Destination in Minutes	Avg Unit Arrived at Destination to Unit Back In Service in Minutes	Number of Runs
1.96	8.05	19.38	23.45	20.87	984

Report Filters

Incident Date Time: is equal to 'Last Year'

Elite lifequest

Fractile Times Report

Fractile Times Report - Unit Notified by Dispatch to Unit Arrived on Scene in Minutes

Region	Agency Name (dAgency.03)	Median Unit Notified by Dispatch to Unit Arrived on Scene - Service	90th Percentile Unit Notified by Dispatch to Unit Arrived on Scene - Service	90th Percentile Unit Notified by Dispatch to Unit Arrived on Scene - Region
South West Region	Deer-Grove EMS District	9.67	15.98	15.98

Fractile Times Report - Unit Notified by Dispatch to Unit En Route in Minutes

Region	Agency Name (dAgency.03)	Median Unit Notified by Dispatch to Unit En Route - Service	90th Percentile Unit Notified by Dispatch to Unit En Route - Service	90th Percentile Unit Notified by Dispatch to Unit En Route - Region
South West Region	Deer-Grove EMS District	1.72	3.78	3.78

Fractile Times Report - Unit En Route to Unit Arrived on Scene in Minutes

Region	Agency Name (dAgency.03)	Median Unit En Route to Unit Arrived on Scene - Service	90th Percentile Unit En Route to Unit Arrived on Scene - Service	90th Percentile Unit En Route to Unit Arrived on Scene - Region
South West Region	Deer-Grove EMS District	8.02	13.91	13.91

Fractile Times Report - Unit Arrived on Scene to Unit Left Scene in Minutes

Region	Agency Name (dAgency.03)	Median Unit Arrived on Scene to Unit Left Scene - Service	90th Percentile Unit Arrived on Scene to Unit Left Scene - Service	90th Percentile Unit Arrived on Scene to Unit Left Scene - Region
South West Region	Deer-Grove EMS District	18.45	29.19	29.19

Fractile Times Report - Unit Left Scene to Patient Arrived at Destination in Minutes

Region	Agency Name (dAgency.03)	Median Unit Left Scene to Patient Arrived at Destination - Service	90th Percentile Unit Left Scene to Patient Arrived at Destination - Service	90th Percentile Unit Left Scene to Patient Arrived at Destination - Region
South West Region	Deer-Grove EMS District	22.87	31.59	31.59

Fractile Times Report - Patient Arrived at Destination to Unit Back in Service in Minutes

Region	Agency Name (dAgency.03)	Median Patient Arrived at Destination to Unit Back in Service - Service	90th Percentile Patient Arrived at Destination to Unit Back in Service - Service	90th Percentile Patient Arrived at Destination to Unit Back in Service - Region
South West Region	Deer-Grove EMS District	19.84	28.24	28.24

Report Filters

Incident Date: is between '1/1/2019' and '12/31/2019'

Runs by Dispatch Reason

Incident Complaint Reported By Dispatch (eDispatch.01)	Number of Runs	Percent of Total Runs
Falls	166	16.87%
Unconscious/Fainting/Near-Fainting	115	11.69%
Sick Person	105	10.67%
Traffic/Transportation Incident/MVA	100	10.16%
Chest Pain (Non-Traumatic)	69	7.01%
Breathing Problem	55	5.59%
Fire Standby	47	4.78%
Traumatic Injury	36	3.66%
Convulsions/Seizure	33	3.35%
Cardiac Arrest/Death	29	2.95%
Hemorrhage/Laceration	26	2.64%
Stroke/CVA	25	2.54%
Abdominal Pain/Problems	23	2.34%
Transfer/Interfacility/Palliative Care	19	1.93%
Assault	14	1.42%
Back Pain (Non-Traumatic)	14	1.42%
Diabetic Problem	14	1.42%
Overdose/Poisoning/Ingestion	14	1.42%
Fire	12	1.22%
Heart Problems/AICD	11	1.12%
Unknown Problem/Person Down	8	0.81%
Allergic Reaction/Stings	7	0.71%
Choking	7	0.71%
Psychiatric Problem/Abnormal Behavior/Suicide Attempt	6	0.61%
Heat/Cold Exposure	5	0.51%
Pregnancy/Childbirth/Miscarriage	4	0.41%
Headache	3	0.30%
Standby	3	0.30%
Motor Vehicle Crash	2	0.20%
No Other Appropriate Choice	2	0.20%
Stab/Gunshot Wound/Penetrating Trauma	2	0.20%
Animal Bite	1	0.10%
Assist Other Agency	1	0.10%
Burns/Explosion	1	0.10%
Carbon Monoxide/Hazmat/Inhalation/CBRN	1	0.10%
Drowning/Diving/SCUBA Accident	1	0.10%
Industrial Accident/Inaccessible Incident/Other Entrapments (Non-Vehicle)	1	0.10%
Medical Alarm	1	0.10%
Snowmobile Accident	1	0.10%
	Total: 984	**Total: 100.00%**

Report Filters

Incident Date: is between '01/01/2019' and '12/31/2019'

DEER-GROVE EMS DISTRICT

4030 County Highway N, Cottage Grove, WI 53527
608-839-5658
(fax) 608-839-4427

2020 INTERFACILITY TRANSFER
BILLING RATES PROPOSAL

- Per request from LifeQuest, we should have a BLS interfacility transfer base rate.
- The base rate and mileage were set with approval of the 2020 budget.
- Current DGEMS Fee Schedule:

Proposed 2020 Fee Schedule	Resident	Non-Resident
BLS	$1,000.00	$1,200.00
ALS1	$1,100.00	$1,300.00
ALS2	$1,400.00	$1,600.00
On Scene Care - BLS	$350.00	$450.00
On Scene Care - ALS	$750.00	$850.00
Mileage	$19.00	$22.00
ALS Transfer	$1,800.00	$1,800.00
Mileage- Transfer	$25.00	$25.00

- 2020 Fee Schedule comparison for base rates:

Comparison Request using Proposed 2020 Fee Schedule

Description Charge	Hartland Fire Dept. EMS Level of Service: EMT-P	Jefferson Paramedic Intercepts Level of Service: EMT-P	Johnson Creek Fire & EMS Level of Service: EMT-P	Oregon Area Fire-EMS Level of Service: *IV-TECH*	Sussex Fire Dept. Level of Service: EMT-P	Deer-Grove EMS District Level of Service: EMT-P	Average
BLS - Resident	$800.00	$1,030.00	$850.00	$850.00	$725.00	$1,000.00	$875.83
BLS - Non Resident	$900.00	$1,030.00	$950.00	$950.00	$875.00	$1,200.00	$984.17
ALS1 - Resident	$1,100.00	$1,500.00	$1,050.00	$950.00	$900.00	$1,100.00	$1,100.00
ALS1 - Non Resident	$1,200.00	$1,500.00	$1,150.00	$1,050.00	$1,100.00	$1,300.00	$1,216.67
ALS2 - Resident	$1,500.00	$1,570.00	$1,250.00	$1,050.00	$950.00	$1,400.00	$1,286.67
ALS2 - Non Resident	$1,600.00	$1,570.00	$1,350.00	$1,150.00	$1,150.00	$1,600.00	$1,403.33
Mileage - Resident	$18.00	$26.00	$15.00	$20.00	$16.00	$19.00	$19.00
Mileage - Non Resident	$20.00	$26.00	$20.00	$22.00	$18.00	$22.00	$21.33
BLS On Scene Care - Resident	$200.00	$515.00	$200.00	$325.00	$225.00	$350.00	$302.50
BLS On Scene Care - Non Resident	$300.00	$515.00	$300.00	$425.00	$375.00	$450.00	$394.17
ALS On Scene Care - Res.	$800.00	$950.00	$750.00	$725.00	$425.00	$750.00	$733.33
ALS On Scene Care - Non Res.	$900.00	$950.00	$900.00	$825.00	$725.00	$850.00	$858.33

- IFT rate comparison completed by LifeQuest:

2020 Rate Comparison for Interfacility Transfers

Description Charge	Beaver Dam Fire Dept Level of Service: EMT-P CC	City of Eau Claire Fire Dept and Rescue Level of Service: EMT-P	North Fond du Lac EMS Level of Service: EMT-P	SAFER EMS Level of Service: EMT-P CC	Door-Grove EMS District Level of Service: EMT-P	Average
Interfacility Transfers - BLS Non-Emergency & Emergency Resident	$700.00	$750.00	$600.00	$875.00	$1,000.00	$785.00
Interfacility Transfers - BLS Non-Emergency & Emergency - Non- Resident	$800.00	$1,000.00	$600.00	$1,025.00	$1,200.00	$925.00
Interfacility Transfers - ALS1 Non-Emergency & Emergency - Non- Resident	$875.00	$1,000.00	$700.00	$975.00	$1,800.00	$1,070.00
Interfacility Transfers - ALS1 Non-Emergency & Emergency - Non- Resident	$975.00	$1,250.00	$700.00	$1,125.00	$1,800.00	$1,170.00
Interfacility Transfers - ALS2 Non-Emergency & Emergency - Non- Resident	$1,390.00	$1,100.00	$700.00	$1,075.00	$1,800.00	$1,213.00
Interfacility Transfers - ALS2 Non-Emergency & Emergency - Non- Resident	$1,490.00	$1,250.00	$700.00	$1,225.00	$1,800.00	$1,293.00
Interfacility Transfers - SCT Non-Emergency & Emergency - Non- Resident	$1,450.00	N/C	N/C	$1,175.00	N/C	$1,312.50
Interfacility Transfers - SCT Non-Emergency & Emergency - Non- Resident	$1,550.00	N/C	N/C	$1,325.00	N/C	$1,437.50
Mileage IFT - BLS, ALS - Resident	$15.50	$19.00	$18.00	$19.00	$25.00	$19.30
Mileage IFT - BLS, ALS - Non-Resident	$16.00	$20.00	$20.00	$20.00	$25.00	$20.20

- Per the review from LifeQuest, many departments completing Interfacility Transfers do not have a separate rate and use their standard base rates.
- Most municipal agencies are offering IFT services to the hospital in their community but will go out of their primary area when called.
- We can choose whatever rate we feel is in our best interest.
- All IFT's completed by DGEMS will be outside of the primary response area.

IFT BASE SRATE RECOMMENDATIONS

- DGEMS staff recommends the following rates:
    - BLS IFT base rate of $1300 regardless of residency status
    - ALS IFT base rate of $1800 regardless of residency status
    - IFT mileage charge or $25 per loaded mile

DEER-GROVE EMS DISTRICT

4030 County Highway N, Cottage Grove, WI 53527
608-839-5658
(fax) 608-839-4427

Deer-Grove EMS/Marshall EMS Collaborative Response
Six-Month Trial Review

- The Deer-Grove EMS District and Marshall Area EMS entered into a collaborative response agreement beginning on July 1, 2019.
- Chief Eric Lang and Director Scott Allain were cross credentialed onto each agency's roster
- Chief Lang would respond with C79 to any second call for service in the Marshall response area. The patient care would be completed using the MAEMS ambulance and equipment. Chief Lang would operate per MAEMS operations plan at the Advanced EMT licensure level.
- Director Allain would respond with a private auto, until arrangements could be made for a department vehicle, to any second call for service in the Deer-Grove response area. The patient care would be completed using the DGEMS ambulance and equipment. Director Allain would operate per DGEMS operations plan at the Advanced EMT licensure level, but this would also allow Chief Lang to operate at the Paramedic licensure level.
- Chief Eric Lang and Director Scott Allain would confer daily to determine availability.
- The collaborative response was able to complete the following responses:

Incident #	EMD	Community	Resp Area	Disposition	Tx Vehicle	Hospital
19-284859	33C2T	V-Marshall	MAEMS	Transport	MRR77	Columbus
19-296155	14D5	V-Marshall	MAEMS	Transport	SNM71	St Mary's SP
19-298165	10C03	T- PS	DGEMS	Transport	DGM78	St Mary's Mad
19-304835	33C5T	V-CG	DGEMS	Transport	DGM78	UW- TAC
20-001500	29D05V	T- Sun Prairie	MAEMS	Transport	MRR77	Meriter

- The two calls completed in the DGEMS response area resulted in the capture of an additional $757.35 in reimbursement.
- During the trial period, there were twenty-three (23) missed opportunities to collaborate. Twenty (20) instances were in the DGEMS response area and three (3) were in the MAEMS response area.
- Factors negatively affecting the ability to collaboratively respond:
  - MAEMS loss of a full-time staff member, requiring Director Allain to respond on primary ambulance
  - Injury and light duty status of Chief Lang for the last two months of 2019
- Factors positively affecting the ability to collaboratively respond moving forward:
  - MAEMS hiring of a full-time staff member
  - Chief Lang cleared for full duty

RECOMMENDED ACTION

- Continue collaborative responses as indicated above
- Review agreement annually to ensure response equality
- Retain the option to halt collaborative response at any time

Letter of Agreement
Medical Transportation Management, Inc.

Ambulance Provider

This Letter of Agreement "Agreement"), effective as of the **Insert Date** shall serve as the Agreement between Medical Transportation Management, Inc., ("MTM"), **Insert Provider Name** a ("Provider"). The Provider's services pursuant to this Agreement shall be provided to MTM on an "as needed" basis to MTM.

1. **Scope of Services.** Provider shall, within the geographic service area of Provider, provide non-emergency ground transportation services as requested by MTM in support of MTM's business. Provider further agrees to:
    a. Obtain authorization from MTM to transport MTM members/patients;
    b. Obtain all required signatures on the Patient Care Report for each leg of the trip;
    c. Report all details of any accident or incident to MTM within 24 hours.

2. **Reimbursement.** MTM will reimburse Provider as set forth in Schedule A attached, for completed and properly submitted clean claims as follows: (1) Ambulance trips for Medicaid patients will be paid at the rate set forth by the state agency governing Medicaid payments current at the time of transport for the appropriate level of service; (2) Ambulance trips for Medicare patients will be paid at the rate set forth by CMS fee schedules current at the time of transport for the appropriate level of service.

3. **Member Protection Provision**. In no event, including, but not limited to, non-payment by MTM for Non-Emergency Transportation ("NEMT") Services rendered for members by Provider, insolvency of MTM, or breach by MTM of any term or condition of the Agreement, shall Provider bill, charge, collect a deposit from, seek compensation, remuneration or reimbursement from, or have any recourse against MTM's Client or any transported member or persons acting on behalf of Member for NEMT Services. Provider agrees not to maintain any action at law or in equity against MTM's Client(s) or any member to collect sums that are owed to Provider by MTM under the terms of this Agreement even in the event that MTM fails to pay, becomes insolvent or otherwise breaches the terms and conditions of the Agreement.

4. **Laws, Regulations, Licenses and Insurance.** Provider shall maintain all federal, state and local licenses, certifications and permits, without material restriction, which are required to provide NEMT Services via ambulance according to the laws of the jurisdiction in which services are provided, and shall provide quality and safe transportation services, and comply with all applicable laws, statutes, ordinances, rules and regulations governing the performance of services herein.

5. **Indemnification.** Provider shall indemnify, defend, and hold harmless MTM and MTM's Client(s) for all losses, damages, and costs, including reasonable attorneys' fees, resulting from Provider's rendering of transportation services, including but not limited to, negligence, unsafe rendering of services, failure to perform, or breach of performance of the services or terms of this Agreement.

6. **Independent Provider Status of Parties.** MTM and Provider are independent contractors with respect to the performance of the terms and conditions of this Agreement. Neither party shall be considered the employee nor agent of the other,and Provider shall determine the manner and methods of performance of Provider's services under this Agreement.

7. **HIPAA Compliance and Data Protection.** Provider shall comply with all terms and conditions of the HIPAA Business Associate Agreement attached hereto.

8. **Term and Termination.** The term of this Agreement shall be for a period of one year, and shall automatically renew for successive periods of one year unless either party provides 30 days prior written notice to the other party of its intent not to renew. Further, this Agreement may be terminated by either party without cause upon 30 days written notice to the other party. This Agreement may be terminated immediately by MTM for any action or inaction of Provider that affects the safety of any person.

9. **Credentials.** Provider shall supply MTM with current copies of the following credentials: (1) State (and local, if required) Ambulance Service License; (2) W-9; and (3) Proof of General Liability, Auto, and Workers Compensation Insurance coverage.

10. **Nondiscrimination.** Provider agrees that no person shall, on the basis of race, color, religion, age, sex, disability, marital status, sexual orientation, public assistance status, creed, or national origin, be excluded from full employment rights in, participation in, be denied the benefits of, or otherwise subjected to discrimination under any program, service, or activity under the provisions of any and all federal and state laws and regulations against discrimination including the Civil Rights Act of 1964, the Rehabilitation Act of 1973, and Age Discrimination Act of 1975. Provider shall furnish all information required by MTM or any state or federal agency for purposes of investigation to ascertain compliance with such rules, regulations and orders.

11. **Entire Agreement.** This Agreement constitutes the entire agreement of the parties relating to the subject matter addressed in this Agreement and this Agreement supersedes all prior communications, contracts and agreements between the parties with respect to the subject matter addressed in this Agreement.

IN WITNESS WHEREOF, the parties hereunto have executed this Agreement as of the date first above written.

MEDICAL TRANSPORTATION MANAGEMENT, INC.

By: _____

Print: _____

Title: _____

Date: _____

INSERT PROVIDER NAME

By: _____

Print: _____

Title: _____

Date: _____

Address: **Insert Provider Address**

HIPAA BUSINESS ASSOCIATE AGREEMENT

This HIPAA Business Associate Agreement ("Agreement") is made and entered into as of the **Insert Date** by and between Medical Transportation Management, Inc. ("MTM") and **Insert Provider Name**, ("Business Associate"). In order to comply with the Health Insurance Portability and Accountability Act and the standards set forth at 45 CFR Parts 142, 160, 162 and 164 (collectively "HIPAA") to safeguard Protected Health Information ("PHI"), Business Associate agrees:

Pursuant to the terms of that certain "Underlying Agreement", MTM contracts with you to provide "Services". In connection with your provision of such Services, you receive or obtain from MTM, the Covered Person or the Governmental entity or Health Plan, or review or create for MTM, the Covered Person or the Governmental entity or Health Plan Covered Person PHI. As a result, Business Associate must: (i) maintain the privacy/ confidentiality of all Covered Person PHI; and (ii) comply with the requirements of HIPAA applicable to Business Associates, all as more fully described below.

1. Your Obligations. You agree that you will maintain the privacy/confidentiality of all Covered Person PHI as required by all applicable laws and regulations, including, without limitation, the requirements of HIPAA, including the following obligations:

(A) Use and Disclosure of PHI. You agree that you will not use or disclose Covered Person PHI, other than to perform the Services, as otherwise expressly permitted by the terms of this Agreement or as required by law; provided, however, that you may use and disclose Covered Person PHI to manage and administer your business. You agree to comply with any and all restrictions on the use and disclosure of Covered Person PHI requested by a Covered Person, agreed to by the applicable MTM Client and communicated to you by MTM. You agree to ensure that all subcontractors, agents, representatives or parties with whom you conduct MTM Client business shall comply with HIPAA.

(B) Safeguards. You represent and warrant that you will develop and implement appropriate safeguards to prevent the use or disclosure of Covered Person PHI for purposes other than as set forth in this Agreement. You will provide MTM with such information concerning such safeguards as MTM may from time to time request.

(C) Accounting of Disclosures. In fulfillment of your obligations under 45 CFR 164.528, you agree to maintain a record of all disclosures of Covered Person PHI made for reasons other than the provision of the Services and will provide the following information regarding any such disclosure to MTM, to the applicable MTM Client, or to the Covered Person whose PHI was disclosed ("Affected Person"), upon our request:

(i) The date of such disclosure;
(ii) The name and, if known, the address of the recipient of such PHI;
(iii) A copy of the request for disclosure, if any, accompanied by any necessary consents or authorizations;
(iv) A brief description of the PHI disclosed; and
(v) A statement that would reasonably inform Affected Person of the purpose of the disclosure.

You agree to notify MTM immediately upon your discovery of any unauthorized disclosure of Covered Person PHI.

(D) Mitigation. You agree to establish procedures for mitigating any deleterious effects of any improper use and/or disclosure of Covered Person PHI.

(E) Disclosures to Workforce and/or Third Parties. You agree to require your employees, agents and independent contractors ("Workforce") to adhere to the restrictions and conditions regarding Covered Person PHI contained in this Section, including, without limitation, the following:

(i) You agree not to disclose Covered Person PHI to any member of your Workforce, unless you have advised such person of your obligations under this Section and the consequences of a violation of these obligations. You agree to take disciplinary action against any member of your Workforce that uses or discloses Covered Person PHI in violation of this Section.

(ii) Except as otherwise authorized under this Agreement, you agree not to disclose Covered Person PHI to any third party without first obtaining our written approval. In addition, you agree not to disclose Covered Person PHI to any third-party without first obtaining the written agreement of such third party to be bound by the requirements of this Section for the express benefit of you, MTM and the applicable MTM Client.

(iii) Any use of Covered Person PHI by your Workforce or disclosure of Covered Person PHI to your Workforce or to third parties must be limited to the minimum amount of Covered Person PHI necessary to achieve the purpose for such use or disclosure.

(F) Access to Records by Subject of Records. You agree to notify MTM immediately in the event you receive a request from a Covered Person identified in any Covered Person PHI ("Subject"), or such person's legal representative ("Legal Representative"), to review any records in your possession or control regarding the Subject ("Subject PHI"). In fulfillment of your obligations under 45 CFR 164.524, you agree to make available to MTM, or at our request, to the applicable MTM Client, to a Subject or such Subject's Legal Representative, for their review, any Subject PHI in your possession or control.

(G) Amendment to PHI. You agree to notify MTM immediately in the event you receive a request from a Subject to amend or otherwise modify any Subject PHI in your possession or control. In fulfillment of your obligations under 45 CFR 164.526, you agree that, at our request, you will make any amendments to Subject PHI that the applicable MTM Client has directed or authorized pursuant to 45 CFR 164.526.

(H) Government Access to Records. You agree to make your policies, books and records relating to the use and disclosure of Covered Person PHI available to the Secretary of the U.S. Department of Health and Human Services, or to the MTM Client, or his or her designee for the purpose of determining whether the applicable MTM Client is in compliance with HIPAA requirements.

(I) Disposition of Records upon Termination. You agree to return to MTM or otherwise destroy all Covered Person PHI in your possession or control upon termination of this Agreement. If such return or destruction of records is not feasible, you agree to continue to extend the protections of this Section to such Covered Person PHI and limit any further use of such Covered Person PHI to those purposes that make the return or destruction of such Covered Person PHI infeasible.

(J) Indemnification. You agree to indemnify, defend and hold harmless MTM and the applicable MTM Client, and their respective parents, subsidiaries and affiliates, and their respective shareholders, directors, officers, employees, agents, legal representatives, heirs, successors and assigns, from and against any and all claims, causes of action, losses, liabilities, damages, costs and expenses, including, without limitation, court costs and attorneys' fees, arising out of, resulting from or caused by a violation by you, or any of your employees, agents or subcontractors, of any HIPAA requirements or of the terms or conditions of this Agreement.

2. Our Obligations. MTM agrees that, in connection with your performance of the Services, MTM shall:

(A) Notification of Restrictions on Use of PHI. MTM agrees to notify you immediately of any restrictions on the use of any Covered Person PHI requested by a Covered Person, agreed to by the applicable MTM Client and communicated to us by the applicable MTM Client.

(B) Notification of Disclosure of Subject PHI to Subject. MTM agrees to notify you immediately in the event the applicable MTM Client desires you to disclose any Subject PHI in your possession or control to the Subject or the Subject's Legal Representative.

(C) Notification of Amendment to Subject PHI. MTM agrees to notify you immediately in the event the applicable MTM Client desires you to amend or otherwise modify any Subject PHI in your possession or control.

Term and Termination. This Agreement will commence on the Effective Date of this Agreement and will continue until such time as the Underlying Agreement expires or is terminated and all PHI provided by or created for MTM is destroyed or returned to MTM or, if it is infeasible to return or destroy PHI, protections are extended to such PHI in accordance with the provisions of this Agreement or by law. Notwithstanding the foregoing, in the event of a material violation by Business Associate, MTM shall have the right to terminate this Agreement and the Underlying Agreement immediately upon notice to Business Associate.

Third Party Beneficiaries. There are no intended third party beneficiaries of the obligations under this Agreement. Without in any way limiting the foregoing, it is the intent that nothing contained in this Agreement give rise to any right or cause of action, contractual or otherwise, in or on behalf of any person whose PHI is used or disclosed pursuant to this Agreement or any person who qualifies as a personal representative of such person.

Amendment of Underlying Agreement. It is the intention that this Agreement serve as an amendment and supplement to the Underlying Agreement. In the event of a conflict between the terms of this Agreement and the terms of the Underlying Agreement, the terms of this Agreement will control.

Compliance with Security Requirements. Business Associate shall comply, and shall ensure all agents and subcontractors comply with the Security Requirements of 45 CFR Part 142 with respect to electronic transmission of PHI.

MEDICAL TRANSPORTATION MANAGEMENT, INC. **INSERT PROVIDER NAME**

By: _____ Name: _____

Title: _____ By: _____

Title: _____

1. Facilities should call MTM reservations at: 866-907-1497 to schedule ambulance trips whenever time allows. Specialist appointments should be called in well before the appointment date. Two or three day's ahead is best, if possible.

2. If an ambulance trip is urgent, and there is no time to call MTM, the trip can be arranged directly with an ambulance company. Then the provider must submit a Post Authorization trip to MTM, **within 2 days of the trip**. Unfortunately, late submission of Post Authorized trips will be denied, per State of Wis. protocols.

3. Hospital discharges, and hospital to hospital transfers (for a higher level of care) are the ***only*** **Post Authorization trips payable** by Medicaid and MTM.

4. The State contract does not allow MTM to pay for transportation from Nursing Homes, except when a member is being discharged, for the initial time. Nursing Homes are responsible for their daily transportation, and must pay for ambulance services.

5. If you have other questions about ambulance transportation with MTM, please contact MTM Network Management at: 608-227-4083. Rob Verrette rverrette@mtm-inc.net

---

RV

Vendor	Vendor Name	Invoice Number	Description	GL Account Number	Net Invoice Amount
ADAMS, JOHN PAUL					
6515	ADAMS, JOHN PAUL	6515-012120	REFUND OF OVERPAYMENT ON UTILITY ACCOUN	001-11105	109.34
	Total ADAMS, JOHN PAUL:				109.34
ADVANCED DISPOSAL					
3820	ADVANCED DISPOSAL	A20000495186	GARBAGE COLLECTION - DECEMBER 2019	100-21100	21,212.05
3820	ADVANCED DISPOSAL	A20000495186	RECYCLING COLLECTION - DECEMBER 2019	100-21100	9,087.66
	Total ADVANCED DISPOSAL:				30,299.71
AFLAC					
880	AFLAC	85360	AFLAC PREMIUM - JANUARY 2020	100-21536	544.72
880	AFLAC	85360	AFLAC PREMIUM - JANUARY 2020	100-52100-156	167.70
	Total AFLAC:				712.42
ALLIANT ENERGY/WP&L					
31	ALLIANT ENERGY/WP&L	31-012120	0420288389 230 PROGRESS DR	100-51700-221	236.23
31	ALLIANT ENERGY/WP&L	31-012120	0420288389 230 PROGRESS DR	600-60920-221	20.84
31	ALLIANT ENERGY/WP&L	31-012120	0420288389 230 PROGRESS DR	601-60850-221	20.84
31	ALLIANT ENERGY/WP&L	31-012120	0470910000 240 PROGRESS DR	100-51700-221	374.60
31	ALLIANT ENERGY/WP&L	31-012120	0470910000 240 PROGRESS DR	600-60920-221	33.05
31	ALLIANT ENERGY/WP&L	31-012120	0470910000 240 PROGRESS DR	601-60850-221	33.05
31	ALLIANT ENERGY/WP&L	31-012120	0627540000 LANDMARK DR STREET LIGHTS	100-53420-221	475.55
31	ALLIANT ENERGY/WP&L	31-012120	0648330000 FORRESTON DR SUMP PUMP	100-53440-340	23.70
31	ALLIANT ENERGY/WP&L	31-012120	1162130000 GROVE ST MIDWAY	100-55200-221	16.70
31	ALLIANT ENERGY/WP&L	31-012120	1366250000 200 PROGRESS DR	100-51700-221	1,911.84
31	ALLIANT ENERGY/WP&L	31-012120	1366250000 200 PROGRESS DR	600-60920-221	168.69
31	ALLIANT ENERGY/WP&L	31-012120	1366250000 200 PROGRESS DR	601-60850-221	168.69
31	ALLIANT ENERGY/WP&L	31-012120	1441950000 125 N MAIN ST LIGHT/SIGN	100-53420-221	79.88
31	ALLIANT ENERGY/WP&L	31-012120	1670310000 1507 LANDMARK DR WELL #4	600-60620-221	2,177.57
31	ALLIANT ENERGY/WP&L	31-012120	1922710000 COMMUNITY PARK BATTING CAGE	100-55200-221	14.85
31	ALLIANT ENERGY/WP&L	31-012120	1960850000 DONNA ST WELL #2	600-60620-221	1,363.35
31	ALLIANT ENERGY/WP&L	31-012120	2222530000 4135 VILAS RD LOT LIGHTS	601-60821-221	42.55
31	ALLIANT ENERGY/WP&L	31-012120	2320700000 704 N MAIN ST WELL #3	600-60620-221	51.05
31	ALLIANT ENERGY/WP&L	31-012120	2620600000 540 N MAIN ST LIGHTS	100-53420-221	58.05
31	ALLIANT ENERGY/WP&L	31-012120	3017850000 NORTHLAWN PARK	100-55200-221	26.63
31	ALLIANT ENERGY/WP&L	31-012120	3143950000 HWY N TOWER	600-60620-221	82.80
31	ALLIANT ENERGY/WP&L	31-012120	3245730000 COMMUNITY PARK/LORI LN	100-55200-221	21.25
31	ALLIANT ENERGY/WP&L	31-012120	3655740000 LIONS SHELTER	100-55200-221	28.03
31	ALLIANT ENERGY/WP&L	31-012120	3917900000 220 GROVE ST	600-60620-221	20.32
31	ALLIANT ENERGY/WP&L	31-012120	4153410000 110 S MAIN ST	601-60821-221	1,130.59
31	ALLIANT ENERGY/WP&L	31-012120	4668230000 TRILLIUM TRL LIFT STATION	601-60821-221	63.18
31	ALLIANT ENERGY/WP&L	31-012120	5067730000 4195 VILAS RD LIFT STATION	601-60821-221	2,117.76
31	ALLIANT ENERGY/WP&L	31-012120	5097830000 MAIN ST TRAFFIC AND STREET LIGHT	100-53420-221	75.82
31	ALLIANT ENERGY/WP&L	31-012120	5163650000 RG HUSTON PARK	100-55200-221	24.05
31	ALLIANT ENERGY/WP&L	31-012120	5282160000 HWY N STOP LIGHTS	100-53400-221	79.68
31	ALLIANT ENERGY/WP&L	31-012120	5656440000 OLDE TOWN STREET LIGHTS	407-57351-820	113.24
31	ALLIANT ENERGY/WP&L	31-012120	5909800000 220 RPOGRESS DR	100-51700-221	305.81
31	ALLIANT ENERGY/WP&L	31-012120	5909800000 220 RPOGRESS DR	600-60920-221	26.98
31	ALLIANT ENERGY/WP&L	31-012120	5909800000 220 RPOGRESS DR	601-60850-221	26.98
31	ALLIANT ENERGY/WP&L	31-012120	6101720000 4720 GASTON CIR WATER TOWER	600-60620-221	208.00
31	ALLIANT ENERGY/WP&L	31-012120	6345350000 W REYNOLDS ST SHED	100-55200-221	28.26
31	ALLIANT ENERGY/WP&L	31-012120	639710000 4062 HWY N TRAFFIC LIGHTS	100-53400-221	17.01
31	ALLIANT ENERGY/WP&L	31-012120	7255110000 221 E COTTAGE GROVE RD	100-51600-221	294.81
31	ALLIANT ENERGY/WP&L	31-012120	7255110000 221 E COTTAGE GROVE RD	600-60920-221	98.27

Vendor	Vendor Name	Invoice Number	Description	GL Account Number	Net Invoice Amount
31	ALLIANT ENERGY/WP&L	31-012120	7255110000 221 E COTTAGE GROVE RD	601-60850-221	98.27
31	ALLIANT ENERGY/WP&L	31-012120	7541940000 704 N MAIN ST WELL #3	600-60620-221	1,019.39
31	ALLIANT ENERGY/WP&L	31-012120	8459260000 225 BONNIE RD	100-53200-221	249.46
31	ALLIANT ENERGY/WP&L	31-012120	8459260000 225 BONNIE RD	600-60920-221	83.16
31	ALLIANT ENERGY/WP&L	31-012120	8459260000 225 BONNIE RD	601-60850-221	83.16
31	ALLIANT ENERGY/WP&L	31-012120	92046000000 COMMERCE PKWY LIFT STATION	601-60821-221	242.62
31	ALLIANT ENERGY/WP&L	31-012120	9615510000 801 DAMASCUS TRL TRAFFIC LIGHT	100-53400-221	32.53
31	ALLIANT ENERGY/WP&L	31-012120	9745820000 FIREMANS PARK	100-55200-221	26.05
31	ALLIANT ENERGY/WP&L	31-012120	9816850000 HWY N STREET AND TRAFFIC LIGHTS	100-53420-221	286.50
31	ALLIANT ENERGY/WP&L	31-012120	9829150000 1000 DAMASCUS TRL PRV STATION	600-60620-221	160.07
31	ALLIANT ENERGY/WP&L	31-012120	9892110000 DUBLIN CIR SHELTER	100-55200-221	20.21
	Total ALLIANT ENERGY/WP&L:				14,361.97
ALSCO					
1462	ALSCO	IMIL1525202	MATS AT MUNICIPAL SERVICES BLDG	100-51700-210	32.15
1462	ALSCO	IMIL1525202	MATS AT MUNICIPAL SERVICES BLDG	600-60920-340	10.71
1462	ALSCO	IMIL1525202	MATS AT MUNICIPAL SERVICES BLDG	601-60850-340	10.71
1462	ALSCO	IMIL1525203	MATS	100-51700-210	20.24
1462	ALSCO	IMIL1525203	UNIFORMS	100-53200-340	31.87
1462	ALSCO	IMIL1525203	MATS & UNIFORMS	600-60920-340	12.41
1462	ALSCO	IMIL1525203	MATS & UNIFORMS	601-60850-340	12.41
1462	ALSCO	IMIL1525204	MATS AT VILLAGE HALL	100-51600-210	23.39
1462	ALSCO	IMIL1525204	MATS AT VILLAGE HALL	600-60920-340	7.80
1462	ALSCO	IMIL1525204	MATS AT VILLAGE HALL	601-60850-340	7.79
1462	ALSCO	IMIL1527379	MATS	100-51700-210	20.24
1462	ALSCO	IMIL1527379	UNIFORMS	100-53200-340	31.87
1462	ALSCO	IMIL1527379	MATS & UNIFORMS	600-60920-340	12.41
1462	ALSCO	IMIL1527379	MATS & UNIFORMS	601-60850-340	12.41
1462	ALSCO	IMIL1527678	MATS AT MUNICIPAL SERVICES BLDG	100-51700-210	32.15
1462	ALSCO	IMIL1527678	MATS AT MUNICIPAL SERVICES BLDG	600-60920-340	10.71
1462	ALSCO	IMIL1527678	MATS AT MUNICIPAL SERVICES BLDG	601-60850-340	10.71
1462	ALSCO	IMIL1527680	MATS AT VILLAGE HALL	100-51600-210	23.39
1462	ALSCO	IMIL1527680	MATS AT VILLAGE HALL	600-60920-340	7.80
1462	ALSCO	IMIL1527680	MATS AT VILLAGE HALL	601-60850-340	7.79
	Total ALSCO:				338.96
APPLIED CONCEPTS INC					
6514	APPLIED CONCEPTS INC	358249	2020 SQUAD	410-57501-810	2,966.00
	Total APPLIED CONCEPTS INC:				2,966.00
AXON ENTERPRISE INC					
5829	AXON ENTERPRISE INC	INC01048130	TASER CARTRIDGE & BATTERY PACKS	100-52100-340	1,265.00
	Total AXON ENTERPRISE INC:				1,265.00
BAER INSURANCE SERVICES LLC					
1062	BAER INSURANCE SERVICES LLC	3425	WORKERS COMP - 1ST QTR 2020- COURT	100-51200-511	110.44
1062	BAER INSURANCE SERVICES LLC	3425	WORKERS COMP - 1ST QTR 2020- POLICE	100-52100-511	4,942.47
1062	BAER INSURANCE SERVICES LLC	3425	WORKERS COMP - 1ST QTR 2020- CROSSING GUA	100-51930-511	125.88
1062	BAER INSURANCE SERVICES LLC	3425	WORKERS COMP - 1ST QTR 2020- GENERAL FUND	100-51930-511	919.87
1062	BAER INSURANCE SERVICES LLC	3425	WORKERS COMP - 1ST QTR 2020- INSPECTORS	100-52400-511	9.51
1062	BAER INSURANCE SERVICES LLC	3425	WORKERS COMP - 1ST QTR 2020- PUBLIC WORKS	100-53300-511	915.98
1062	BAER INSURANCE SERVICES LLC	3425	WORKERS COMP - 1ST QTR 2020- RECREATION	100-55310-511	517.21
1062	BAER INSURANCE SERVICES LLC	3425	WORKERS COMP - 1ST QTR 2020- CABLE	201-51600-511	22.74

Vendor	Vendor Name	Invoice Number	Description	GL Account Number	Net Invoice Amount
1062	BAER INSURANCE SERVICES LLC	3425	WORKERS COMP - 1ST QTR 2020- WATER OPERA	600-60925-511	1,042.93
1062	BAER INSURANCE SERVICES LLC	3425	WORKERS COMP - 1ST QTR 2020- SEWER OPERA	601-60853-511	861.29
1062	BAER INSURANCE SERVICES LLC	3425	WORKERS COMP - 1ST QTR 2020- BOARD	100-51930-511	163.98
1062	BAER INSURANCE SERVICES LLC	3425	WORKERS COMP - 1ST QTR 2020- POLL WORKER	100-51930-511	12.70
	Total BAER INSURANCE SERVICES LLC:				9,645.00
BAKER TILLY VIRCHOW KRAUSE LLP					
15	BAKER TILLY VIRCHOW KRAUSE LL	BT1533329	PROF SERVICES - AUDIT	100-51520-210	3,238.00
	Total BAKER TILLY VIRCHOW KRAUSE LLP:				3,238.00
BLUESTEM FORESTRY CONSULTING INC					
6512	BLUESTEM FORESTRY CONSULTIN	146	25% PAYMENT FOR URBAN FOREST INVENTORY	202-56110-210	12,000.00
	Total BLUESTEM FORESTRY CONSULTING INC:				12,000.00
BOBCAT OF MADISON INC					
754	BOBCAT OF MADISON INC	01-08431	BOBCAT BRUSH REPLACEMENT	100-53300-340	422.66
754	BOBCAT OF MADISON INC	01-08431	BOBCAT BRUSH REPLACEMENT	600-60935-340	140.89
754	BOBCAT OF MADISON INC	01-08431	BOBCAT BRUSH REPLACEMENT	601-60834-340	140.89
	Total BOBCAT OF MADISON INC:				704.44
BROOKS TRACTOR INC					
181	BROOKS TRACTOR INC	S95448	FILLER CAP	100-53300-340	51.23
181	BROOKS TRACTOR INC	S95448	FILLER CAP	600-60935-340	17.08
181	BROOKS TRACTOR INC	S95448	FILLER CAP	601-60834-340	17.08
	Total BROOKS TRACTOR INC:				85.39
BURKE TRUCK & EQUIPMENT					
2	BURKE TRUCK & EQUIPMENT	26093	PLOW TRUCK PARTS	100-53300-340	3.14
2	BURKE TRUCK & EQUIPMENT	26093	PLOW TRUCK PARTS	600-60935-340	1.04
2	BURKE TRUCK & EQUIPMENT	26093	PLOW TRUCK PARTS	601-60834-340	1.04
2	BURKE TRUCK & EQUIPMENT	26114	PLOW TRUCK PARTS	100-53300-340	407.20
2	BURKE TRUCK & EQUIPMENT	26114	PLOW TRUCK PARTS	600-60935-340	135.74
2	BURKE TRUCK & EQUIPMENT	26114	PLOW TRUCK PARTS	601-60834-340	135.74
2	BURKE TRUCK & EQUIPMENT	26177	PLOW TRUCK PARTS	100-53300-340	183.90
2	BURKE TRUCK & EQUIPMENT	26177	PLOW TRUCK PARTS	600-60935-340	61.30
2	BURKE TRUCK & EQUIPMENT	26177	PLOW TRUCK PARTS	601-60834-340	61.30
2	BURKE TRUCK & EQUIPMENT	26181	PLOW TRUCK PARTS	100-53300-340	173.05
2	BURKE TRUCK & EQUIPMENT	26181	PLOW TRUCK PARTS	600-60935-340	57.69
2	BURKE TRUCK & EQUIPMENT	26181	PLOW TRUCK PARTS	601-60834-340	57.69
	Total BURKE TRUCK & EQUIPMENT:				1,278.83
CAPITAL NEWSPAPERS					
4818	CAPITAL NEWSPAPERS	1683750	PLANNING	100-56300-340	75.29
4818	CAPITAL NEWSPAPERS	1683751	PLANNING	100-56300-340	64.68
4818	CAPITAL NEWSPAPERS	1683752	PLANNING	100-56300-340	66.80
4818	CAPITAL NEWSPAPERS	1683753	TID #5	405-57120-820	71.05
4818	CAPITAL NEWSPAPERS	1683913	VILLAGE CLERK	100-51420-320	64.85
	Total CAPITAL NEWSPAPERS:				342.67

Vendor	Vendor Name	Invoice Number	Description	GL Account Number	Net Invoice Amount
CARD SERVICE CENTER					
30	CARD SERVICE CENTER	30-012120PD	OFFICE SUPPLIES	100-52100-310	837.23
30	CARD SERVICE CENTER	30-012120PD	SUPPLIES	100-52100-340	572.04
30	CARD SERVICE CENTER	30-012120PD	TRAINING AND TRAVEL	100-52100-330	125.95
30	CARD SERVICE CENTER	30-012120PD	UNIFORMS	100-52100-342	664.32
30	CARD SERVICE CENTER	30-012120PD	CAR WASH CARD - KWIK TRIP	100-52100-240	330.00
30	CARD SERVICE CENTER	30-012120PD	MEMBERSHIP RENEWAL - STORTZ	100-52100-320	80.00
30	CARD SERVICE CENTER	30-012120PD	FITNESS EQUIPMENT	410-57501-810	5,196.00
30	CARD SERVICE CENTER	30-012120PD	UPS SHIPMENT - KLO GUN	100-52100-311	94.73
30	CARD SERVICE CENTER	30-012120PR	GAS CANS	100-53300-340	41.98
30	CARD SERVICE CENTER	30-012120PR	GAS CANS	600-60935-340	14.00
30	CARD SERVICE CENTER	30-012120PR	GAS CANS	601-60834-340	14.00
30	CARD SERVICE CENTER	30-012120PR	BATTERIES FOR EMERGENCY LIGHTING AT MSB	100-51700-340	43.31
30	CARD SERVICE CENTER	30-012120PR	BATTERIES FOR EMERGENCY LIGHTING AT MSB	600-60935-340	8.42
30	CARD SERVICE CENTER	30-012120PR	BATTERIES FOR EMERGENCY LIGHTING AT MSB	601-60834-340	8.42
30	CARD SERVICE CENTER	30-012120PR	EXCEL CLASS - SEAN AND BROOKE	100-55310-330	108.80
30	CARD SERVICE CENTER	30-012120PR	COMPUTER MONITOR	100-55310-340	79.99
30	CARD SERVICE CENTER	30-012120PR	NRPA MEMBERSHIP - BROOKE FRANSEEN	100-55310-320	110.00
30	CARD SERVICE CENTER	30-012120PR	HDMI ADAPTER	100-55310-340	7.45
30	CARD SERVICE CENTER	30-012120PR	KEYBOARD REPLACEMENT- KRISTEN'S COMPUTE	100-53100-340	25.50
30	CARD SERVICE CENTER	30-012120PR	KEYBOARD REPLACEMENT- KRISTEN'S COMPUTE	600-60920-340	8.50
30	CARD SERVICE CENTER	30-012120PR	KEYBOARD REPLACEMENT- KRISTEN'S COMPUTE	601-60850-340	8.50
30	CARD SERVICE CENTER	30-012120PW	SHOP SUPPLIES - TOOLS	100-53300-340	155.51
30	CARD SERVICE CENTER	30-012120PW	SHOP SUPPLIES - TOOLS	600-60935-340	51.84
30	CARD SERVICE CENTER	30-012120PW	SHOP SUPPLIES - TOOLS	600-60935-340	51.84
30	CARD SERVICE CENTER	30-012120PW	2- NOZZLES	100-53300-340	26.50
30	CARD SERVICE CENTER	30-012120PW	2- NOZZLES	600-60935-340	8.84
30	CARD SERVICE CENTER	30-012120PW	2- NOZZLES	601-60834-340	8.84
30	CARD SERVICE CENTER	30-012120PW	MODEM FOR AMI SYSTEM	600-34600	749.02
30	CARD SERVICE CENTER	30-012120PW	EXCEL CLASS - JJ AND KRISTEN	100-53100-330	36.27
30	CARD SERVICE CENTER	30-012120PW	EXCEL CLASS - JJ AND KRISTEN	600-60920-330	36.27
30	CARD SERVICE CENTER	30-012120PW	EXCEL CLASS - JJ AND KRISTEN	601-60850-330	36.26
30	CARD SERVICE CENTER	30-012120PW	EXCEL CLASS- SARAH	100-51420-330	27.20
30	CARD SERVICE CENTER	30-012120PW	EXCEL CLASS- SARAH	100-51520-330	27.20
30	CARD SERVICE CENTER	30-012120VH	BACKGROUND CHECKS FOR NEW OPERATOR LIC	100-51420-340	14.00
30	CARD SERVICE CENTER	30-012120VH	BACKGROUND CHECK FOR NEW CROSSING GUA	100-51420-340	7.00
30	CARD SERVICE CENTER	30-012120VH	WMCA - RENEWAL MEMBERSHIP - LISA KALATA	100-51420-320	65.00
30	CARD SERVICE CENTER	30-012120VH	EMPLOYEE HOLIDAY GIFT CARDS - JIMMY JOHNS	100-51950-340	110.00
Total CARD SERVICE CENTER:					9,790.73
CHARTER COMMUNICATIONS					
2421	CHARTER COMMUNICATIONS	17282010520	MONTHLY BASIC BUSINESS TV & INTERNET - 1/5/2	100-51600-350	96.40
2421	CHARTER COMMUNICATIONS	17282010520	MONTHLY BASIC BUSINESS TV & INTERNET - 1/5/2	600-60920-340	32.13
2421	CHARTER COMMUNICATIONS	17282010520	MONTHLY BASIC BUSINESS TV & INTERNET - 1/5/2	601-60850-340	32.13
2421	CHARTER COMMUNICATIONS	57023010120	BUSINESS TV @ MUNICIPAL SERVICES BUILIDING	100-51700-225	30.51
2421	CHARTER COMMUNICATIONS	57023010120	BUSINESS TV @ MUNICIPAL SERVICES BUILIDING	600-60920-225	2.69
2421	CHARTER COMMUNICATIONS	57023010120	BUSINESS TV @ MUNICIPAL SERVICES BUILIDING	601-60850-225	2.69
2421	CHARTER COMMUNICATIONS	58542011020	PHONE @ MUNICIPAL SERVICES BLDG	100-51700-225	168.02
2421	CHARTER COMMUNICATIONS	58542011020	PHONE @ MUNICIPAL SERVICES BLDG	600-60920-225	14.83
2421	CHARTER COMMUNICATIONS	58542011020	PHONE @ MUNICIPAL SERVICES BLDG	601-60850-225	14.82
2421	CHARTER COMMUNICATIONS	73715010520	MONTHLY PHONE CHARGE VH - 1/5/20-2/4/20	100-51600-350	84.80
2421	CHARTER COMMUNICATIONS	73715010520	MONTHLY PHONE CHARGE VH - 1/5/20-2/4/20	600-60920-340	28.26
2421	CHARTER COMMUNICATIONS	73715010520	MONTHLY PHONE CHARGE VH - 1/5/20-2/4/20	601-60850-340	28.26
Total CHARTER COMMUNICATIONS:					535.54

Vendor	Vendor Name	Invoice Number	Description	GL Account Number	Net Invoice Amount
CINTAS					
6480	CINTAS	5015752680	FIRST AID KIT SUPPLIES - MSB	100-51700-210	48.11
6480	CINTAS	5015752680	FIRST AID KIT SUPPLIES - MSB	600-60935-340	4.25
6480	CINTAS	5015752680	FIRST AID KIT SUPPLIES - MSB	601-60834-340	4.25
	Total CINTAS:				56.61
CITI CARDS					
5700	CITI CARDS	5700-012120	BACKGROUND CHECKS	100-55310-342	28.00
5700	CITI CARDS	5700-012120	REC EVENT - BUCKS GAME	100-55310-344	1,330.00
5700	CITI CARDS	5700-012120	MEALS - SEAN BRUSEGAR & TIMM TAYLOR	100-55310-340	20.72
5700	CITI CARDS	5700-012120	KLEENEX	100-55310-340	13.18
5700	CITI CARDS	5700-012120	REC EVENT - CASCADE SKI TRIP	100-55310-344	1,420.00
	Total CITI CARDS:				2,811.90
CNA SURETY					
4312	CNA SURETY	4312-012120	VILLAGE CLERK BOND	100-51930-512	100.00
	Total CNA SURETY:				100.00
COMPUTER MAGIC INC					
930	COMPUTER MAGIC INC	4791	SERVER CABINET TO ORGANIZE VH COMMUNICA	410-21100	642.68
930	COMPUTER MAGIC INC	4794	PW COMPUTER UPGRADES	410-57320-225	2,009.63
930	COMPUTER MAGIC INC	4794	PW COMPUTER UPGRADES	600-60920-340	669.87
930	COMPUTER MAGIC INC	4794	PW COMPUTER UPGRADES	601-60850-340	669.87
	Total COMPUTER MAGIC INC:				3,992.05
CORE & MAIN LP					
1463	CORE & MAIN LP	L254758	AMI SYSTEM ANTENNA & INSTALL ON WATER TOW	600-34600	10,000.00
	Total CORE & MAIN LP:				10,000.00
DANE CO REGISTER OF DEEDS					
419	DANE CO REGISTER OF DEEDS	419-012120	FILING OF VILLAGE CORPORATE LIMITS CERTIFIC	100-51520-340	30.00
	Total DANE CO REGISTER OF DEEDS:				30.00
DANE CO TREASURER					
87	DANE CO TREASURER	87-012120	DOG TAGS #7301-7385	100-44210-000	1,178.75
	Total DANE CO TREASURER:				1,178.75
DEER CREEK TECHNOLOGIES					
5808	DEER CREEK TECHNOLOGIES	2020-110	DOCUMENT MANAGEMENT SOFTWARE 13 USERS	100-52100-214	297.00
	Total DEER CREEK TECHNOLOGIES:				297.00
DEER-GROVE EMS					
251	DEER-GROVE EMS	251-012120	2020 EMS ASSESSMENT - 25%	100-52500-210	63,119.76
	Total DEER-GROVE EMS:				63,119.76
DIGGERS HOTLINE INC					
626	DIGGERS HOTLINE INC	191 2 13551	DUPLICATE/COPY EMAILS & PREPAID FAX FEES F	601-60850-340	40.95
626	DIGGERS HOTLINE INC	191 2 13551	DUPLICATE/COPY EMAILS & PREPAID FAX FEES F	600-60920-340	40.95

Vendor	Vendor Name	Invoice Number	Description	GL Account Number	Net Invoice Amount
	Total DIGGERS HOTLINE INC:				81.90
EHLERS & ASSOCIATES INC					
4995	EHLERS & ASSOCIATES INC	81765	2019 FINANCIAL MANAGEMENT PLAN	100-21100	1,680.00
4995	EHLERS & ASSOCIATES INC	81765	2019 FINANCIAL MANAGEMENT PLAN	600-21100	560.00
4995	EHLERS & ASSOCIATES INC	81765	2019 FINANCIAL MANAGEMENT PLAN	601-21100	560.00
	Total EHLERS & ASSOCIATES INC:				2,800.00
FRONTIER					
3912	FRONTIER	3912-012120	608-839-8064 CLERK OF COURTS	100-51200-340	54.27
3912	FRONTIER	3912-012120	608-839-1603 FAX & SCADA SYSTEM	100-53100-225	83.28
3912	FRONTIER	3912-012120	608-839-1603 FAX & SCADA SYSTEM	100-55310-225	83.28
3912	FRONTIER	3912-012120	608-839-1603 FAX & SCADA SYSTEM	600-60935-340	55.52
3912	FRONTIER	3912-012120	608-839-1603 FAX & SCADA SYSTEM	601-60832-340	55.52
3912	FRONTIER	3912-012120	608-839-4588 EMERGENCY PHONE & FAX	100-52100-225	70.88
	Total FRONTIER:				402.75
FULL COMPASS SYSTEMS LTD					
6516	FULL COMPASS SYSTEMS LTD	INC01048130	CABLE EQUIPMENT	410-57320-225	9,030.05
6516	FULL COMPASS SYSTEMS LTD	INC01048256	HDMI TO SDI CONVERTER	410-57320-225	50.60
6516	FULL COMPASS SYSTEMS LTD	INC01048859	MINICONVERTER SDI	410-57320-225	285.56
6516	FULL COMPASS SYSTEMS LTD	INC01050044	2 BATTERY CHARGERS	410-57320-225	183.74
6516	FULL COMPASS SYSTEMS LTD	INC01051040	2 - 19" CHARGE STATIONS	410-57320-225	1,000.40
	Total FULL COMPASS SYSTEMS LTD:				10,550.35
GENERAL CODE PUBLISHERS					
690	GENERAL CODE PUBLISHERS	PC0000031518	LASERFICHE CLOUD	410-57320-225	2,640.00
690	GENERAL CODE PUBLISHERS	PC0000031518	LASERFICHE CLOUD	600-60902-340	880.00
690	GENERAL CODE PUBLISHERS	PC0000031518	LASERFICHE CLOUD	601-60840-340	880.00
	Total GENERAL CODE PUBLISHERS:				4,400.00
GRAINGER					
142	GRAINGER	9389400525	LIGHTS AT VILLAGE HALL	100-51600-340	40.94
142	GRAINGER	9389400525	LIGHTS AT VILLAGE HALL	600-60935-340	13.65
142	GRAINGER	9389400525	LIGHTS AT VILLAGE HALL	601-60834-340	13.65
142	GRAINGER	9389400525	SHOP TOWELS	100-53100-340	8.50
142	GRAINGER	9389400525	SHOP TOWELS	600-60920-340	2.83
142	GRAINGER	9389400525	SHOP TOWELS	601-60850-340	2.83
142	GRAINGER	9390320324	LIGHTS AT VILLAGE HALL	100-51600-340	457.70
142	GRAINGER	9390320324	LIGHTS AT VILLAGE HALL	600-60935-340	152.57
142	GRAINGER	9390320324	LIGHTS AT VILLAGE HALL	601-60834-340	152.57
142	GRAINGER	9392604980	GREEN MARKING FLAGS (2)	601-60831-340	25.60
142	GRAINGER	9392604980	RED MARKING FLAG	407-57351-820	6.66
142	GRAINGER	9392604980	RED MARKING FLAG	405-57530-820	6.66
142	GRAINGER	9398582909	VILLAGE STREET LIGHTS	405-57530-820	22.38
142	GRAINGER	9398582909	VILLAGE STREET LIGHTS	407-57351-820	22.38
	Total GRAINGER:				928.92
GROSKREUTZ, MARTY					
937	GROSKREUTZ, MARTY	937-012120	SAFETY BOOTS ALLOWANCE	100-53300-340	75.00
937	GROSKREUTZ, MARTY	937-012120	SAFETY BOOTS ALLOWANCE	600-60600-340	25.00

Vendor	Vendor Name	Invoice Number	Description	GL Account Number	Net Invoice Amount
937	GROSKREUTZ, MARTY	937-012120	SAFETY BOOTS ALLOWANCE	601-60827-340	25.00
	Total GROSKREUTZ, MARTY:				125.00
HAWKINS INC					
6121	HAWKINS INC	4642819	AZONE 15 AND HYDROFLUOSILICIC ACID	600-60630-340	897.55
	Total HAWKINS INC:				897.55
HYDROCORP					
6454	HYDROCORP	0055552-IN	CROSS CONNECTION CONTROL PROGRAM	600-60923-210	1,147.00
	Total HYDROCORP:				1,147.00
LAUFENBERG, KEVIN					
5302	LAUFENBERG, KEVIN	5302-012120	REFUND OF TAX OVERPAYMENT	100-12100	258.99
	Total LAUFENBERG, KEVIN:				258.99
MADISON METRO SEWERAGE DIST					
37	MADISON METRO SEWERAGE DIST	RC000003093	YAHARA WATERSHED ADAPTIVE MGMT	100-53440-820	12,000.00
	Total MADISON METRO SEWERAGE DIST:				12,000.00
MAEDER, ANN					
5579	MAEDER, ANN	5579-012120	1/10 - SKI AND SNOWBOARD CLUB - 7 HOURS	100-55310-344	140.00
	Total MAEDER, ANN:				140.00
MEINEKE COTTAGE GROVE #2474					
5772	MEINEKE COTTAGE GROVE #2474	28065	OIL CHANGE - SQUAD 162	100-52100-380	37.99
5772	MEINEKE COTTAGE GROVE #2474	28068	OIL CHANGE - SQUAD 14	100-52100-380	37.99
	Total MEINEKE COTTAGE GROVE #2474:				75.98
MID-AMERICA ECONOMIC DEVELOPMENT CONUCIL					
6450	MID-AMERICA ECONOMIC DEVELOP	02077	MAEDC CONFERENCE FOR ERIN RUTH	100-21100	850.00
	Total MID-AMERICA ECONOMIC DEVELOPMENT CONUCIL:				850.00
MIDWEST TOXICOLOGY SERVICES LLC					
5545	MIDWEST TOXICOLOGY SERVICES L	382559	ANNUAL DOT CONSORTIUM ADMINISTRATION FEE	100-53100-340	69.00
5545	MIDWEST TOXICOLOGY SERVICES L	382559	ANNUAL DOT CONSORTIUM ADMINISTRATION FEE	600-60920-340	23.00
5545	MIDWEST TOXICOLOGY SERVICES L	382559	ANNUAL DOT CONSORTIUM ADMINISTRATION FEE	601-60850-340	23.00
	Total MIDWEST TOXICOLOGY SERVICES LLC:				115.00
MOTOROLA SOLUTIONS INC					
6000	MOTOROLA SOLUTIONS INC	16077404	2020 SQUAD	410-57501-810	4,521.72
	Total MOTOROLA SOLUTIONS INC:				4,521.72
NAPA AUTO PARTS					
167	NAPA AUTO PARTS	685616	SHOP SUPPLIES REFUND	100-53300-340	22.79-
167	NAPA AUTO PARTS	685616	SHOP SUPPLIES REFUND	600-60935-340	7.59-
167	NAPA AUTO PARTS	685616	SHOP SUPPLIES REFUND	601-60834-340	7.59-
167	NAPA AUTO PARTS	685617	SHOP SUPPLIES	100-53300-340	29.94

Vendor	Vendor Name	Invoice Number	Description	GL Account Number	Net Invoice Amount
167	NAPA AUTO PARTS	685617	SHOP SUPPLIES	600-60935-340	9.98
167	NAPA AUTO PARTS	685617	SHOP SUPPLIES	601-60834-340	9.98
167	NAPA AUTO PARTS	685635	SHOP SUPPLIES	100-53300-340	29.30
167	NAPA AUTO PARTS	685635	SHOP SUPPLIES	600-60935-340	9.77
167	NAPA AUTO PARTS	685635	SHOP SUPPLIES	601-60834-340	9.77
167	NAPA AUTO PARTS	685831	OIL DISPENSER	100-53300-340	18.73
167	NAPA AUTO PARTS	685831	OIL DISPENSER	600-60935-340	6.25
167	NAPA AUTO PARTS	685831	OIL DISPENSER	601-60834-340	6.25
	Total NAPA AUTO PARTS:				92.00
O'REILLY AUTO PARTS					
4458	O'REILLY AUTO PARTS	4331-324289	FUEL	100-53300-385	13.19
4458	O'REILLY AUTO PARTS	4331-324289	FUEL	600-60933-385	4.40
4458	O'REILLY AUTO PARTS	4331-324289	FUEL	601-60828-385	4.39
	Total O'REILLY AUTO PARTS:				21.98
OVERHEAD DOOR COMPANY					
5711	OVERHEAD DOOR COMPANY	22741	MSB - DOOR AT FRONT DESK	100-51700-340	144.00
5711	OVERHEAD DOOR COMPANY	22741	MSB - DOOR AT FRONT DESK	600-60935-340	28.00
5711	OVERHEAD DOOR COMPANY	22741	MSB - DOOR AT FRONT DESK	601-60834-340	28.00
5711	OVERHEAD DOOR COMPANY	22743	MSB - GARAGE DOOR TO SHOP	100-51700-340	699.54
5711	OVERHEAD DOOR COMPANY	22743	MSB - GARAGE DOOR TO SHOP	600-60935-340	61.73
5711	OVERHEAD DOOR COMPANY	22743	MSB - GARAGE DOOR TO SHOP	601-60834-340	61.73
	Total OVERHEAD DOOR COMPANY:				1,023.00
PARAGON DEVELOPMENT SYSTEMS INC					
6380	PARAGON DEVELOPMENT SYSTEM	01134911	BADGER BOOKS SUPPLIES	100-51440-340	124.24
6380	PARAGON DEVELOPMENT SYSTEM	01134913	BADGER BOOK	100-51440-340	1,865.00
	Total PARAGON DEVELOPMENT SYSTEMS INC:				1,989.24
PELLITTERI WASTE SYSTEMS					
2506	PELLITTERI WASTE SYSTEMS	911180	DATA SHRED - PD DECEMBER 2019 SERVICES	100-52100-340	37.23
	Total PELLITTERI WASTE SYSTEMS:				37.23
PIGGLY WIGGLY					
382	PIGGLY WIGGLY	382-012120	TURKEYS FOR REC EVENT	100-55310-344	87.69
382	PIGGLY WIGGLY	382-012120	BATTERIES	100-55310-340	13.58
382	PIGGLY WIGGLY	382-012120	GATORADE	100-55310-342	13.38
	Total PIGGLY WIGGLY:				114.65
POMP'S TIRE SERVICE INC					
2813	POMP'S TIRE SERVICE INC	80204520	1 TON TIRES	100-53300-340	500.10
2813	POMP'S TIRE SERVICE INC	80204520	1 TON TIRES	600-60935-340	166.70
2813	POMP'S TIRE SERVICE INC	80204520	1 TON TIRES	601-60834-340	166.70
2813	POMP'S TIRE SERVICE INC	80204931	TOOL CAT TIRES	100-53300-340	356.40
2813	POMP'S TIRE SERVICE INC	80204931	TOOL CAT TIRES	600-60935-340	118.80
2813	POMP'S TIRE SERVICE INC	80204931	TOOL CAT TIRES	601-60834-340	118.80
2813	POMP'S TIRE SERVICE INC	80205415	FLAT REPAIR 3/4 TON	100-53300-340	17.10
2813	POMP'S TIRE SERVICE INC	80205415	FLAT REPAIR 3/4 TON	600-60935-340	5.70
2813	POMP'S TIRE SERVICE INC	80205415	FLAT REPAIR 3/4 TON	601-60834-340	5.70

Vendor	Vendor Name	Invoice Number	Description	GL Account Number	Net Invoice Amount
Total POMP'S TIRE SERVICE INC:					1,456.00
QUILL CORP					
12	QUILL CORP	3701228	COPY PAPER, BINDER CLIPS, 2020 WALL CALEND	100-55310-340	92.38
12	QUILL CORP	3701228	COPY PAPER, BINDER CLIPS, 2020 WALL CALEND	600-60920-340	30.80
12	QUILL CORP	3701228	COPY PAPER, BINDER CLIPS, 2020 WALL CALEND	601-60850-340	30.80
Total QUILL CORP:					153.98
RUTH, ERIN					
5025	RUTH, ERIN	5025-012120	11/4 - MILEAGE TO AND FROM WI LODGING CONF	100-56700-270	54.52
5025	RUTH, ERIN	5025-012120	11/15 - BIZ TIME COMMERICAL DEVELOPMENT CO	100-56700-270	65.00
5025	RUTH, ERIN	5025-012120	11/15 - MILEAGE TO AND FROM BIZ TIME CONFER	100-56700-270	89.32
5025	RUTH, ERIN	5025-012120	12/3 - AMERICAN PLANNING ASSOCIATION MEMBE	100-56300-210	517.00
5025	RUTH, ERIN	5025-012120	12/8 - MILEAGE TO MAEDC CONFERENCE	100-56700-270	86.42
5025	RUTH, ERIN	5025-012120	12/8-12/9 - HOTEL FOR MAEDC CONFERENCE (2 NI	100-56700-270	531.81
5025	RUTH, ERIN	5025-012120	12/8-12/9 - PARKING FOR MAEDC CONFERENCE	100-56700-270	144.00
5025	RUTH, ERIN	5025-012120	12/10 - MILEAGE BACK FROM MAEDC CONFEREN	100-56700-270	86.42
Total RUTH, ERIN:					1,574.49
SECURIAN FINANCIAL GROUP INC					
10	SECURIAN FINANCIAL GROUP INC	10-012120	LIFE INS PREMIUMS - FEBRUARY 2020	100-16200	932.85
Total SECURIAN FINANCIAL GROUP INC:					932.85
SOILS & ENGINEERING SERVICES					
6461	SOILS & ENGINEERING SERVICES	6461-012120	SOIL BORINGS FOR BAKKEN PARK SPLASH PAD A	100-55200-210	3,000.00
6461	SOILS & ENGINEERING SERVICES	6461-012120	SOIL BORINGS FOR BAKKEN PARK SPLASH PAD A	100-55200-350	280.00
Total SOILS & ENGINEERING SERVICES:					3,280.00
STARK, LORI					
6511	STARK, LORI	6511-012120	REFUND OF TAX OVERPAYMENT	100-12100	53.12
Total STARK, LORI:					53.12
SUPERIOR CHEMICAL CORP					
11	SUPERIOR CHEMICAL CORP	249912	SHOP SUPPLIES	100-53300-340	40.12
11	SUPERIOR CHEMICAL CORP	249912	SHOP SUPPLIES	600-60935-340	13.37
11	SUPERIOR CHEMICAL CORP	249912	SHOP SUPPLIES	601-60834-340	13.37
11	SUPERIOR CHEMICAL CORP	249912	LIFT STATION DEGREASER	601-60827-340	1,025.45
Total SUPERIOR CHEMICAL CORP:					1,092.31
SYSTEMS FURNITURE INC					
5160	SYSTEMS FURNITURE INC	34629	OFFICE/DESK/FILES/INSTALL FOR PARKS FOREM	410-57320-820	2,066.50
5160	SYSTEMS FURNITURE INC	34629	OFFICE/DESK/FILES/INSTALL FOR PARKS FOREM	100-51700-340	1,446.55
5160	SYSTEMS FURNITURE INC	34629	OFFICE/DESK/FILES/INSTALL FOR PARKS FOREM	100-51700-240	619.94
Total SYSTEMS FURNITURE INC:					4,132.99
TOWN OF COTTAGE GROVE					
92	TOWN OF COTTAGE GROVE	2019068	SHARED SERVICES - DECEMBER 2019	100-52200-340	17,624.52
92	TOWN OF COTTAGE GROVE	2019068	SHARED SERVICES - DECEMBER 2019	100-52210-221	1,059.51
92	TOWN OF COTTAGE GROVE	2019068	SHARED SERVICES - DECEMBER 2019	100-52210-222	227.10

Vendor	Vendor Name	Invoice Number	Description	GL Account Number	Net Invoice Amount
92	TOWN OF COTTAGE GROVE	2019068	SHARED SERVICES - DECEMBER 2019	100-52210-340	765.35
92	TOWN OF COTTAGE GROVE	2019068	SHARED SERVICES - DECEMBER 2019	100-52300-340	37.50
92	TOWN OF COTTAGE GROVE	2019068	SHARED SERVICES - DECEMBER 2019	100-53630-210	274.73
92	TOWN OF COTTAGE GROVE	2019068	SHARED SERVICES - DECEMBER 2019	100-51910-500	6,512.37
92	TOWN OF COTTAGE GROVE	2019068	SHARED SERVICES - DECEMBER 2019	100-51610-720	465.87
	Total TOWN OF COTTAGE GROVE:				26,966.95
TRESTER HOIST AND EQUIPMENT					
6484	TRESTER HOIST AND EQUIPMENT	7248660	CRANE REPAIRS AT VILAS LIFT STATION	601-60834-340	1,542.05
	Total TRESTER HOIST AND EQUIPMENT:				1,542.05
US CELLULAR					
594	US CELLULAR	348205781	CELL PHONE CHARGES - PUBLIC WORKS	100-53100-225	84.33
594	US CELLULAR	348205781	CELL PHONE CHARGES - PUBLIC WORKS	600-60920-225	28.11
594	US CELLULAR	348205781	CELL PHONE CHARGES - PUBLIC WORKS	601-60850-225	28.11
594	US CELLULAR	348205781	CELL PHONE CHARGES - PARKS	100-55200-225	150.98
594	US CELLULAR	348205781	TABLET DATA CHARGES	601-60850-225	45.74
594	US CELLULAR	348205781	TABLET DATA CHARGES	600-60920-225	45.74
594	US CELLULAR	348513999	CELL PHONE CHARGES - POLICE DEPT	100-52100-225	400.44
	Total US CELLULAR:				783.45
USELMAN PLUMBING LLC					
1953	USELMAN PLUMBING LLC	1255	REPIPE METER HORN @ 706B WILLOW RUN	600-60652-340	132.00
	Total USELMAN PLUMBING LLC:				132.00
VAUGHAN, CARTER					
6118	VAUGHAN, CARTER	6118-012120	1/4 - SMARTSTART AND ROOKIE BASKETBALL	100-55310-342	22.00
6118	VAUGHAN, CARTER	6118-012120	1/4 - SMARTSTART AND ROOKIE BASKETBALL	100-55310-344	10.00
	Total VAUGHAN, CARTER:				32.00
VAUGHAN, MASON					
6006	VAUGHAN, MASON	6006-012120	1/4 - ROOKIE BASKETBALL	100-55310-342	22.00
6006	VAUGHAN, MASON	6006-012120	1/8 - 2ND GRADE BASKETBALL	100-55310-342	17.50
	Total VAUGHAN, MASON:				39.50
VILLAGE OF COTTAGE GROVE					
428	VILLAGE OF COTTAGE GROVE	428-012120	2019 TAXES ON MISCELLANEOUS VILLAGE PROP	100-51520-340	39.75
	Total VILLAGE OF COTTAGE GROVE:				39.75
WI STATE LABORATORY OF HYGIENE					
6373	WI STATE LABORATORY OF HYGIEN	620855	FLUORIDE	600-60630-210	26.00
	Total WI STATE LABORATORY OF HYGIENE:				26.00
WILDES, LINDA M					
6250	WILDES, LINDA M	6250-012120	REFUND OF TAX OVERPAYMENT	100-12100	258.99
	Total WILDES, LINDA M:				258.99

Vendor	Vendor Name	Invoice Number	Description	GL Account Number	Net Invoice Amount
WOLF PAVING & EXCAVATING CO.					
635	WOLF PAVING & EXCAVATING CO.	66129	1.88 TON QPR	100-53300-370	236.79
	Total WOLF PAVING & EXCAVATING CO.:				236.79
WPRA					
759	WPRA	689	MEMBERSHIP RENEWAL - BROOKE FRANSEEN	100-55310-320	150.00
	Total WPRA:				150.00
	Grand Totals:				254,716.55

Village - $ 231,773.98
Water & Sewer- $ 22,942.57

Total Invoices- $ 254,716.55